**AGAGCAPNL01A**

**Gas Conversion Kit Propane−to−Natural for Low−Capacity Gas Furnace 26,000 BTUH Only**

# Installation Instructions

**NOTE**: Read the entire instruction manual before starting the installation.

## SAFETY CONSIDERATION

### ⚠ WARNING

**FIRE, EXPLOSION, ELECTRICAL SHOCK, AND CARBON MONOXIDE POISONING HAZARD**

Failure to follow this warning could result in personal injury or death.

This conversion kit shall be installed by a qualified service agency in accordance with the manufacturer's instructions and all applicable codes and requirements of the authority having jurisdiction. If the information in these instructions is not followed exactly, a fire, explosion, or production of carbon monoxide could result causing property damage, personal injury, or loss of life. The qualified service agency is responsible for the proper installation of this furnace with this kit. The installation is not proper and complete until the operation of the converted appliance is checked as specified in the manufacturer's instructions supplied with the kit.

### ⚠ AVERTISSEMENT

**LE FEU, L'EXPLOSION, CHOC ELECTRIQUE, ET MONOXYDE DE CARBONE EMPOISONNER**

Cette trousse de conversion doit être installée par un servie d'entretien qualifié, selon les instructions du fabricant et selon toutes les exigences et tous les codes pertinents de l'autorité compétente. Assurezvous de bien suivre les instructions dans cette notice pour réduire au minimum le risque d'incendie, d'explosion ou la production de monoxyde de carbone pouvant causer des dommages matériels, de blessure ou la mort. Le service d'entretien qualifié est responsable de l'installation de cette trousse. L'installation n'est pas adéquate ni complète tant que le bon fonctionnement de l'appereil converti n'a pas été vérfié selon les instructions du fabricant fornies avec la trousse.

Installing and servicing heating equipment can be hazardous due to gas and electrical components. Only trained and qualified personnel should install, repair, or service heating equipment.

Untrained personnel can perform basic maintenance functions such as cleaning and replacing air filters. Trained service personnel must perform all other operations. When working on heating equipment, observe precautions in the literature, on tags, and on labels attached to or shipped with the unit, and other safety precautions that may apply.

Follow all safety codes. In the United States, follow all safety codes including the current edition of the National Fuel Gas Code (NFGC) NFPA No. 54/ANSI Z223.1. In Canada, refer to the current edition of the National Standard of Canada, Natural Gas and Propane Installation Codes (NSCNGPIC), CAN/CSA-B149.1 and .2. Wear safety glasses and work gloves. Have a fire extinguisher available during start-up, adjustment steps, and service calls.

Recognize safety information. This is the safety-alert symbol ⚠. When you see this symbol on the furnace and in instructions or manuals, be alert to the potential for personal injury. Understand the signal words DANGER, WARNING, CAUTION and NOTE. The words DANGER, WARNING, and CAUTION are used with the safety alert symbol. DANGER identifies the most serious hazards which **will** result in severe personal injury or death. WARNING signifies a hazard which **could** result in personal injury or death. CAUTION is used to identify unsafe practices which **may** result in minor personal injury or product and property damage. NOTE is used to highlight suggestions which **will** result in enhanced installation, reliability, or operation.

## INTRODUCTION

### ⚠ WARNING

**FIRE, EXPLOSION, ELECTRICAL SHOCK AND CARBON MONOXIDE POISONING HAZARD**

Failure to follow instructions could result in personal injury, death or property damage.

Improper installation, adjustment, alteration, service, maintenance, or use can cause carbon monoxide poisoning, explosion, fire, electrical shock, or other conditions, which could result in personal injury or death. Consult your distributor or branch for information or assistance. The qualified installer or agency must use only factory-authorized kits or accessories when servicing this product.

## ⚠ WARNING

**FIRE, EXPLOSION, ELECTRICAL SHOCK HAZARD**

Failure to follow this warning could result in personal injury, death or property damage.

Gas supply MUST be shut off before disconnecting electrical power and proceeding with conversion.

## ⚠ WARNING

**ELECTRICAL SHOCK, FIRE OR EXPLOSION HAZARD**

Failure to follow this warning could result in personal injury, death or property damage.

Before installing, modifying, or servicing system, main electrical disconnect switch must be in the OFF position and install a lockout tag. There may be more than one disconnect switch. Lock out and tag switch with a suitable warning label. Verify proper operation after servicing.

This instruction covers the installation of gas conversion kit to convert the 59SC5(A,B)026, 59SP5A026, 915S(A,B)026, 925SA026, PG95ESAA30026A, PG95SAS026, F9MXE0261410, G9MXE261410, N9MSE026140. N95ESN026, R95ESN026, and WFSX026 26,000 BTUH low capacity furnaces from Propane gas usage to natural gas usage.

# DESCRIPTION AND USAGE

See Table 1 for kit contents. This kit is designed for use in the furnaces listed in Table 2. To accommodate many different furnace models, more parts are shipped in kit than will be needed to complete conversion. When installation is complete, discard extra parts.

**Table 1 – Kit Contents**

| QTY | DESCRIPTION |
|---|---|
| 1 | VALVE CVRSN KIT W/R SPRING F92–1035 |
| 7 | PARTS ASSY #42 |
| 7 | PARTS ASSY #43 |
| 7 | PARTS ASSY #44 |
| 1 | LABEL KIT |
| 1 | LABEL,SHIPPING |
| 1 | INSTR GAS CVRSN LP TO NAT |
| 1 | PLUG, PIPE |

**Table 2 – Condensing Furnaces**

| MODEL NUMBERS BEGINNING WITH: | | | | | |
|---|---|---|---|---|---|
| 59SC5 | 59SP5 | 915S | 925S | PG95S | G9MXE |
| PG95E | F9MXE | N9MSE | N95ESN | R95ESN | WFSX |
| 26,000 BTUH Input Only | | | | | |

# INSTALLATION

1. Set room thermostat to lowest setting or “OFF”
2. Disconnect power at external disconnect, fuse or circuit breaker.
3. Turn off gas at external shut-off or gas meter.
4. Remove outer doors and set aside.
5. Turn electric switch on gas valve to OFF.

## MANIFOLD/ORIFICE/BURNER REMOVAL

## ⚠ CAUTION

**UNIT OPERATION HAZARD**

Failure to follow this caution may result in unit damage or improper operation.

Label all wires prior to disconnection when servicing controls.

## ⚠ PRUDENCE

**D’EQUIPEMENT D’OPERATION**

Toute erreur de câblage peut être une source de danger et de panne.

Lors des opérations d’entretien des commandes, étiqueter tous les fils avant de les déconnecter.

1. Disconnect the gas pipe from gas valve and remove pipe from the furnace casing. See Figure 1.

**NOTE**: Use a back-up wrench on the gas valve to prevent the valve from rotating on the manifold or damaging the mounting to the burner box. See Figure 2 and Figure 3.

2. Disconnect the connector harness from gas valve. Disconnect wires from Hot Surface Igniter (HSI) and Flame Sensor. Disconnect the two wires from the Low Gas Pressure Switch (LGPS) located on the gas valve.
3. Support the manifold and remove the 4 screws that secure the manifold assembly to the burner box and set aside.
4. Note the location of the green/yellow wire ground wire for re-assembly later. See Figure 2.

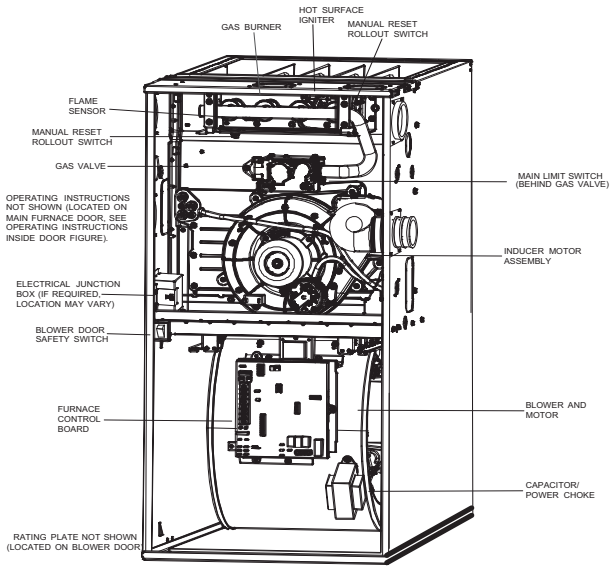

REPRESENTATIVE DRAWING ONLY, SOME MODELS MAY VARY IN APPEARANCE.

**Figure 1 - Representative Furnace Drawing**

5. Slide one-piece burner assembly out of slots on sides of burner box.
6. Remove the flame sensor from the burner assembly. See Figure 3.
7. Remove the orifices from the manifold and discard.

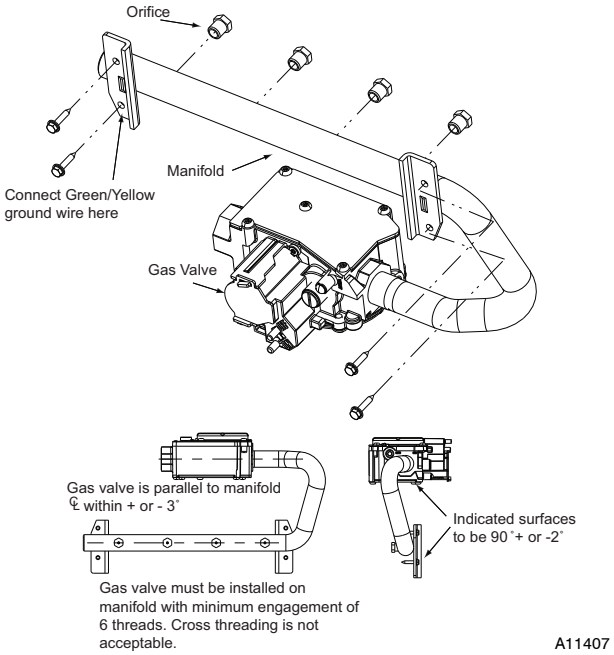


**Figure 2 - Manifold Assembly**

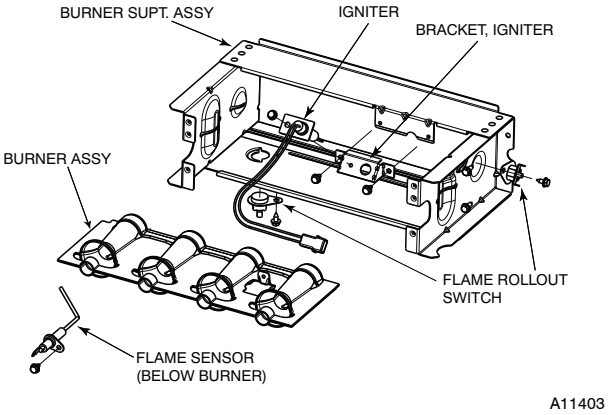


**Figure 3 - Burner Assembly**

## ORIFICE SELECTION/DERATE

**⚠ CAUTION**

**UNIT DAMAGE HAZARD**

Failure to follow this caution may result in unit damage.

DO NOT re-drill burner orifices. Improper drilling may result in burrs, out-of-round holes, etc. Obtain new orifices if orifice size must be changed. (See Figure 4.)

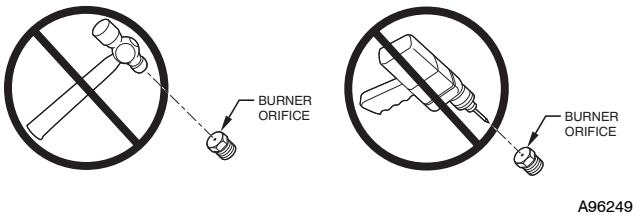


**Figure 4 - Burner Orifice**

Determine natural gas orifice size and manifold pressure for correct input at installed altitude by using Table 3.

1. Obtain yearly heat-value average (at installed altitude) for local gas supply.
2. Obtain yearly specific-gravity average for local gas supply.
3. Find installation altitude in Table 3.

**NOTE**: For Canada altitudes of 2000 to 4500 ft., use U.S.A. Altitudes of 2001 to 3000 ft. In Table 3.

4. Find closest natural gas heat value and specific gravity in Table 3.
5. Follow heat-value line and specific-gravity line to point of intersection to find orifice size and manifold pressure settings.

Furnace gas input rate on furnace rating plate is for installations at altitudes up to 2000 ft. (610 M).

**In the U.S.A.**; the input rating for altitudes above 2000 ft. (610 M) must be reduced by 2 percent for each 1000 ft. (305 M) above sea level.

**In Canada**, the input rating must be derated by 5 percent for altitudes of 2000 ft. to 4500 ft. (610 M to 1372 M) above sea level.

The Conversion Kit Rating Plate accounts for high altitude derate.

## INSTALL ORIFICES

1. Install main burner orifices. DO NOT use Teflon tape. Finger-tighten orifices at least one full turn to prevent cross-threading, then tighten with wrench.
2. There are additional size orifices for different heat content gases. Discard extra orifices.

**NOTE**: DO NOT reinstall the manifold at this time.

## REMOVE MIXER SCREWS FROM THE BURNERS

**NOTE**: Each burner contains a mixer screw that must be removed. Refer to Figure 5 for the mixer screw location.

1. Remove the mixer screws from the burners.

**NOTE**: It is not necessary to plug the hole in the burner when the mixer screws are removed.

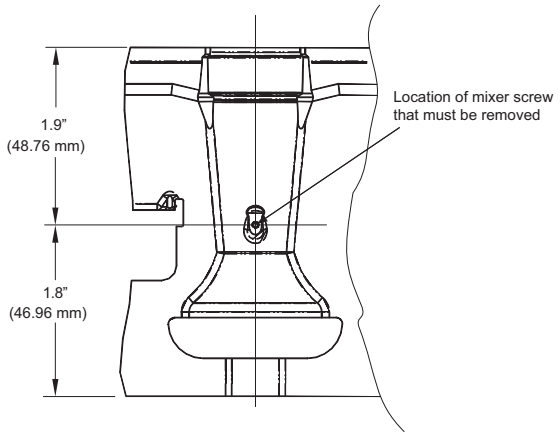


**Figure 5 - Mixer Screw Location**

## REINSTALL BURNER ASSEMBLY

To reinstall burner assembly:

1. Attach flame sensor to burner assembly.
2. Insert one-piece burner in slot on sides of burner box and slide burner back in place.
3. Reattach HSI wires to HSI.
4. Verify igniter to burner alignment. See Figure 6 & Figure 7.

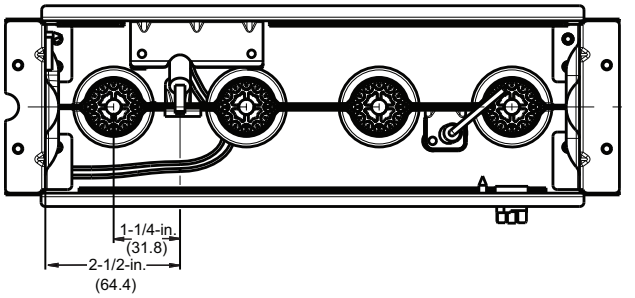


**Figure 6 - Igniter Position - Back View**

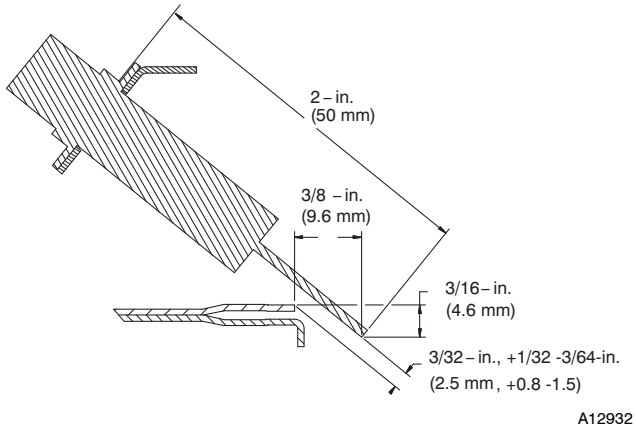


**Figure 7 - Igniter Position - Side View**

## CONVERT GAS VALVE

**⚠ CAUTION**

**UNIT DAMAGE HAZARD**

Failure to follow this caution may result in unit damage

The gas valve must be converted and pre-adjusted before operating on natural gas. If left this way, sooting and corrosion will occur leading to early heat exchanger failure.

**⚠ WARNING**

**FIRE, EXPLOSION, ELECTRICAL SHOCK HAZARD**

Failure to follow this warning could result in personal injury, death or property damage.

Gas supply MUST be shut off before disconnecting electrical power and proceeding with conversion.

**⚠ WARNING**

**ELECTRICAL SHOCK, FIRE OR EXPLOSION HAZARD**

Failure to follow this warning could result in personal injury, death or property damage.

Before installing, modifying, or servicing system, main electrical disconnect switch must be in the OFF position and install a lockout tag. There may be more than one disconnect switch. Lock out and tag switch with a suitable warning label. Verify proper operation after servicing.

**NOTE**: The green labeled Low-Capacity single-stage valve DOES NOT need to have the regulator spring replaced in the gas valve. The regulator in the gas valve must be pre-adjusted to convert from propane to natural gas applications. An identical regulator spring is included in the kit to be used in the event the factory spring is unnecessarily removed and misplaced during the propane conversion. The regulator spring is red in color to distinguish it from other regulator springs.

1. Refer to Figure 8.
2. Be sure gas and electrical supplies to furnace are off.
3. Remove cap that conceals the adjustment screw for the gas-valve regulator. (See Figure 8.)
4. Turn the regulator adjustment screw one (1) full turn out. This will decrease the manifold pressure closer to the natural gas set point.
5. DO NOT install the brass regulator seal cap at this time.
6. If the red regulator spring is removed, install the spring and the adjustment screw.
7. Turn the adjusting screw clockwise (in) 10.5 full turns. This will increase the manifold pressure closer to the natural gas set point. (See Figure 8.)
8. DO NOT install regulator seal cap at this time.

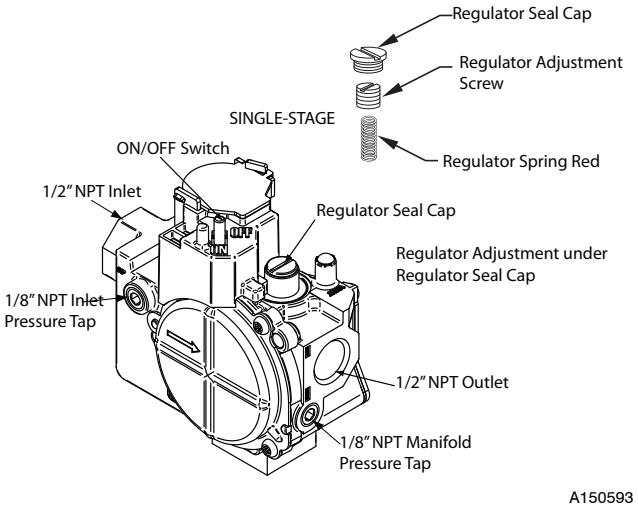


**Single-Stage Gas Valve without Tower Pressure Ports**

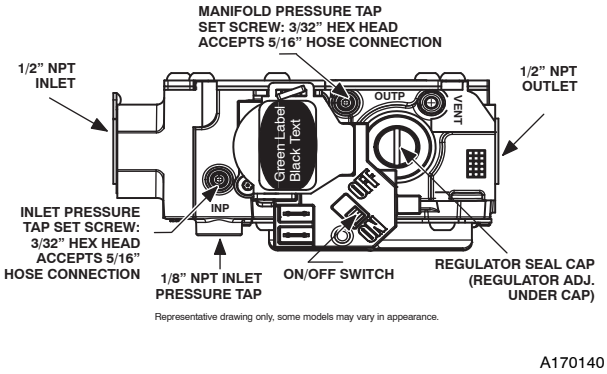


**Figure 8 - Single-Stage Gas Valve with Tower Pressure Ports**

# REMOVE LOW GAS PRESSURE SWITCH

**NOTE**: There are two ways that the Low Gas Pressure Switch (LGPS) could have been installed during the original natural to Propane gas conversion.

**All 14 3/16-in (360 mm) Casings or Vent Passed Between Inducer Assembly and Burner Assembly**

If the vent pipe passes between the inducer and burner assembly, or the furnace is a 14 3/16-in. (360 mm) wide casing. The switch may be installed as shown in Figure 9.

1. Remove low gas pressure switch, brass street 90° elbow, brass Hex nipple, brass tee and black iron street 90° elbow from the gas valve inlet pressure tap. (See Figure 9.)

**NOTE**: Use pipe dope approved for use with Propane gas. DO NOT use Teflon tape.

2. Apply pipe dope sparingly to the 1/8-in. NPT pipe plug (provided in kit) and install in the 1/8-in tapped inlet-pressure tap opening in the gas valve. DO NOT over-tighten. Check for gas leaks after gas supply has been turned on.

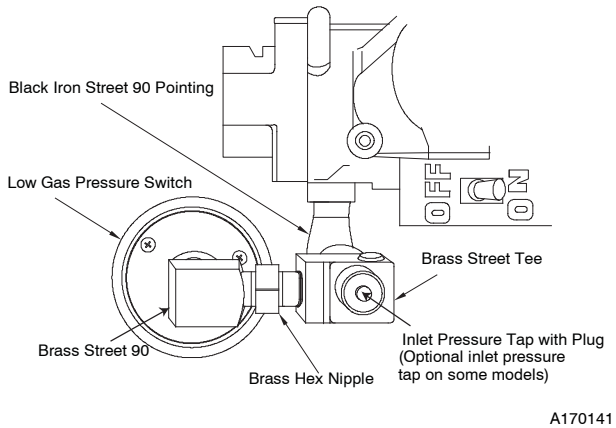


**Figure 9 - Low Gas Pressure Switch Removal**

## ⚠ WARNING

**FIRE AND EXPLOSION HAZARD**

Failure to follow this warning could result in personal injury, death, and/or property damage.

NEVER test for gas leaks with an open flame. Use a commercially available soap solution made specifically for the detection of leaks to check all connections. A fire or explosion may result causing property damage, personal injury or loss of life.

## ⚠ AVERTISSEMENT

**RISQUE D'EXPLOSION ET D'INCENDIE**

Cet avertissement peut entraîner de la mort, des blessures et/ou des dégâts matériels.

Ne jamais examiner pour les fuites de gaz avec une flamme vive. Utilisez plutôt un savon fait specifiquement pour la détection des fuites de gaz pour verifier tous les connections. Un incendie ou une explosion peut entrainer des dommages matériels, des blessures ou la mort.

**Casings Wider Than 14 3/16-in. (360 mm) / Vent Does Not Pass Between Inducer and Burner Assembly**

If the vent pipe does not pass between the inducer and burner assembly, or the furnace is wider than a 14 3/16-in. (360 mm) wide casing. The switch may be installed as shown in Figure 10.

1. Remove Low Gas Pressure Switch, brass street tee, brass nipple and brass street 90° elbow from the gas valve inlet pressure tap. See Figure 10.

**NOTE**: Use pipe dope approved for use with Propane gas. DO NOT use Teflon tape.

2. Apply pipe dope sparingly to the 1/8-in. NPT pipe plug (provided in kit) and install in the 1/8-in tapped inlet-pressure tap opening in the gas valve. DO NOT over-tighten. Check for gas leaks after gas supply has been turned on.

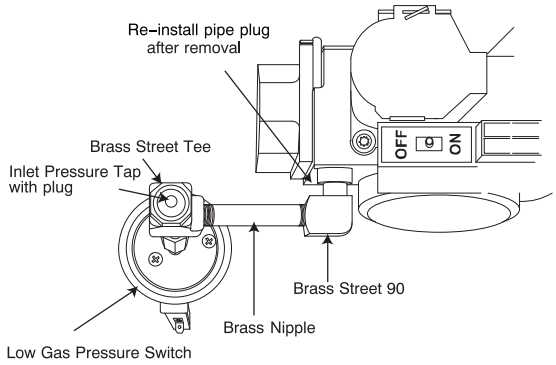


**Figure 10 - Alternate Low Gas Pressure Switch Removal**

## INSTALL MANIFOLD

1. Align the orifices in the manifold assembly with the support rings on the end of the burner.
2. Insert the orifices in the support rings of the burners. Manifold mounting tabs should fit flush against the burner box.

**NOTE**: If manifold does not fit flush against the burner box, the burners are not fully seated forward. Remove the manifold and check burner positioning in the burner box assembly.

3. Attach the green/yellow wire and ground terminal to one of the manifold mounting screws. See Figure 2.
4. Install the remaining manifold mounting screws.
5. Connect the wires to the flame sensor and hot surface igniter.
6. Connect the connector harness to gas valve.
7. Rewire unit low pressure switch (LPS) as follows:
   a. Trace one of the orange wires previously disconnected from the LGPS back to the NO terminals of the LPS.
   b. Trace the other orange wire previously disconnected from the LGPS back to its splice connection with the yellow wire of the furnace wire harness. Disconnect and discard this orange wire and the splice connection.
   c. Connect the yellow wire of the furnace wire harness (see “b” above) to the NO terminal of the LPS.
   d. Refer to the furnace wiring diagram to ensure proper location of wires.

**NOTE**: Use only Propane-resistant pipe dope. DO NOT use Teflon tape.

8. Insert the gas pipe through the grommet in the casing. Apply a thin layer of pipe dope to the threads of the pipe and thread the pipe by into the gas valve.

**NOTE**: Use a back-up wrench on the gas valve to prevent the valve from rotating on the manifold or damaging the mounting to the burner box.

9. With a back-up wrench on the inlet boss of the gas valve, finish tightening the gas pipe to the gas valve.
10. Turn gas on at electric switch on gas valve.

## CHECK INLET GAS PRESSURE

**⚠ CAUTION**

**UNIT DAMAGE HAZARD**

Failure to follow this caution may result in unit damage.

DO NOT operate furnace more than one minute to check inlet gas pressure, as conversion is not complete at this time.

**NOTE**: This kit is to be used only when inlet gas pressure is between 4.5-in. W.C. and 13.6-in. W.C.

1. On some models, remove 1/8-in. (3 mm) pipe plug from pressure tap on the inlet end of gas valve and insert pressure tap. Or, on some models, loosen set screw on inlet tower pressure tap no more than one full turn with the 3/32-in. hex wrench.
2. Verify manometer is connected to inlet pressure tap on gas valve. (See Figure 8.)
3. Turn on furnace power supply.
4. Turn gas supply manual shutoff valve to ON position.

**⚠ WARNING**

**FIRE, EXPLOSION, ELECTRICAL SHOCK HAZARD**

Failure to follow this warning could result in personal injury, death or property damage.

Gas supply MUST be shut off before disconnecting electrical power and proceeding with conversion.

**⚠ WARNING**

**ELECTRICAL SHOCK, FIRE OR EXPLOSION HAZARD**

Failure to follow this warning could result in personal injury, death or property damage.

Before installing, modifying, or servicing system, main electrical disconnect switch must be in the OFF position and install a lockout tag. There may be more than one disconnect switch. Lock out and tag switch with a suitable warning label. Verify proper operation after servicing.

5. Turn furnace gas valve switch to ON position.
6. Jumper R-W thermostat connections on control.
7. When main burners ignite, confirm inlet gas pressure is between 4.5-in. W.C. and 13.6-in. W.C.
8. Remove jumper across R-W thermostat connections to terminate call for heat.
9. Turn furnace gas valve switch to OFF position.
10. Turn gas supply manual shutoff valve to OFF position.
11. Turn off furnace power supply.
12. Remove manometer and on some models remove pressure tap fitting.
13. On some models, apply pipe dope sparingly to the 1/8-in. (3 mm) NPT pipe plug and install in the 1/8-in. (3 mm) tapped inlet-pressure tap opening in the gas valve. Or, on some models, tighten set screw on inlet tower pressure tap with a 3/32-in. hex wrench. (See **Figure 8**.)

## CHECK FURNACE AND MAKE ADJUSTMENTS

**⚠ WARNING**

**FIRE AND EXPLOSION HAZARD**

Failure to follow this warning could result in personal injury, death, and/or property damage.

NEVER test for gas leaks with an open flame. Use a commercially available soap solution made specifically for the detection of leaks to check all connections. A fire or explosion may result causing property damage, personal injury or loss of life.

**⚠ AVERTISSEMENT**

**RISQUE D'EXPLOSION ET D'INCENDIE**

Cet avertissement peut entraîner de la mort, des blessures et/ou des dégâts matériels.

Ne jamais examiner pour les fuites de gaz avec une flamme vive. Utilisez plutôt un savon fait specifiquement pour la détection des fuites de gaz pour verifier tous les connections. Un incendie ou une explosion peut entrainer des dommages matériels, des blessures ou la mort.

1. Be sure main gas and electric supplies to furnace are off.
2. On some models, remove 1/8-in. (3 mm) NPT pipe plug from manifold pressure tap on outlet end of gas valve. Or, on some models, loosen set screw on manifold tower pressure tap no more than one full turn with a 3/32-in. hex wrench.
3. Attach manometer to manifold pressure tap on gas valve. (see **Figure 8**)
4. Turn gas supply manual shutoff valve to ON position.
5. Turn furnace gas valve switch to ON position.
6. Check all threaded pipe connections for gas leaks.
7. Turn on furnace power supply.

## GAS INPUT RATE INFORMATION

See furnace rating plate on blower door for input rate. The input rate for natural gas is determined by manifold pressure and orifice size.

Determine natural gas orifice size and manifold pressure for correct input at installed altitude by using Table 3.

1. Obtain yearly heat-value average (at installed altitude) for local gas supply.
2. Obtain yearly specific-gravity average for local gas supply.
3. Find installation altitude in Table 3.

**NOTE**: For Canada altitudes of 2000 to 4500 ft., use U.S.A. Altitudes of 2001 to 3000 ft. in Table 3.

4. Find closest natural gas heat value and specific gravity in Table 3.
5. Follow heat-value line and specific-gravity line to point of intersection to find orifice size and manifold pressure setting.

Furnace gas input rate on rating plate is for installations at altitudes up to 2000 ft. (610 M).

**In the U.S.A.**; the input rating for altitudes above 2000 ft. (610M) must be reduced by 2 percent for each 1000 ft. (305 M) above sea level.

**In Canada**; the input rating must be derated by 5 percent for altitudes of 2000 ft. (610 M) to 4500 ft. (1372 M) above sea level.

The Conversion Kit Rating Plate accounts for high altitude derate.

## SET GAS INPUT RATE

**⚠ WARNING**

**FIRE AND EXPLOSION HAZARD**

Failure to follow this warning could result in personal injury, death, and/or property damage.

NEVER test for gas leaks with an open flame. Use a commercially available soap solution made specifically for the detection of leaks to check all connections. A fire or explosion may result causing property damage, personal injury or loss of life.

**⚠ AVERTISSEMENT**

**RISQUE D'EXPLOSION ET D'INCENDIE**

Cet avertissement peut entraîner de la mort, des blessures et/ou des dégâts matériels.

Ne jamais examiner pour les fuites de gaz avec une flamme vive. Utilisez plutôt un savon fait specifiquement pour la détection des fuites de gaz pour verifier tous les connections. Un incendie ou une explosion peut entrainer des dommages matériels, des blessures ou la mort.

6. Jumper R and W thermostat connections to call for heat. (See Figure 12.)
7. Check manifold orifices for gas leaks when main burners ignite.
8. Adjust gas manifold pressure. Refer to **Table 3**.
9. Remove cap that conceals the gas valve regulator adjustment screw.
10. Turn adjusting screw counterclockwise (out) to decrease manifold pressure or clockwise (in) to increase manifold pressure.
11. Replace gas valve regulator seal cap.
12. Verify manifold pressure is correct. Refer to **Table 3**.

**NOTE**: Gas valve regulator seal cap MUST be in place when checking input rate. When correct input is obtained, main burner flame should be clear blue, almost transparent (See Figure 11). Be sure regulator seal cap is in place when finished.

13. Remove jumper across R and W thermostat connections to terminate call for heat.
14. Turn furnace gas valve control switch or control knob to OFF position.
15. Turn off furnace power supply.
16. Remove manometer and on some models remove pressure tap fitting.
17. On some models, apply pipe dope sparingly to end of 1/8-in. (3 mm) pipe plug and install in the manifold pressure tap opening. Or, on some models, tighten set screw on manifold tower pressure tap with a 3/32-in. hex wrench. See **Figure 8**.
18. Turn furnace gas-valve switch to ON position.
19. Turn on furnace power supply.
20. Set room thermostat to call for heat.
21. Check pressure tap plug for gas leaks when main burners ignite.
22. Check for correct burner flame.
23. After making the required manifold pressure adjustments, check and adjust the furnace temperature rise per the furnace installation instructions.

## Table 3 – Orifice Size and Manifold Pressure Table
## 26,000 BTUH ONLY

**ORIFICE SIZE* AND MANIFOLD PRESSURE (IN WC) FOR GAS INPUT RATE**

**(TABULATED DATA BASED ON 13,000 BTUH PER BURNER, DERATED 2%/1000 FT (305M) ABOVE SEA LEVEL**

| | ALTITUDE RANGE ft (m) | AVG. GAS HEAT VALUE AT ALTITUDE (Btu/cu ft) | SPECIFIC GRAVITY OF NATURAL GAS | | | | | | | |
|---|---|---|---|---|---|---|---|---|---|---|
| | | | 0.58 | | 0.60 | | 0.62 | | 0.64 | |
| | | | Orifice No. | Manifold Pressure | Orifice No. | Manifold Pressure | Orifice No. | Manifold Pressure | Orifice No. | Manifold Pressure |
| U.S.A. and Canada | | 900 | **44** | **1.8** | 43 | 1.7 | 43 | 1.7 | 43 | 1.8 |
| | 0 | 925 | **44** | **1.7** | **44** | **1.8** | 43 | 1.6 | 43 | 1.7 |
| | (0) | 950 | **44** | **1.6** | **44** | **1.7** | **44** | **1.8** | **44** | **1.8** |
| | | 975 | **44** | **1.6** | **44** | **1.6** | **44** | **1.7** | **44** | **1.7** |
| | to | 1000 | **44** | **1.5** | **44** | **1.5** | **44** | **1.6** | **44** | **1.6** |
| | | 1025 | **44** | **1.4** | **44** | **1.5** | **44** | **1.5** | **44** | **1.6** |
| | 2000 | 1050 | **44** | **1.3** | **44** | **1.4** | **44** | **1.4** | **44** | **1.5** |
| | (610) | 1075 | **44** | **1.3** | **44** | **1.3** | **44** | **1.4** | **44** | **1.4** |
| | | 1100 | **44** | **1.2** | **44** | **1.3** | **44** | **1.3** | **44** | **1.4** |
| U.S.A. and Canada | U.S.A. | 800 | 43 | 1.7 | 43 | 1.8 | 43 | 1.8 | 42 | 1.6 |
| | 2001 (611) | 825 | 43 | 1.6 | 43 | 1.7 | 43 | 1.7 | 43 | 1.8 |
| | to | 850 | **44** | **1.8** | **44** | **1.8** | 43 | 1.6 | 43 | 1.7 |
| | 3000 (914) | 875 | **44** | **1.7** | **44** | **1.7** | **44** | **1.8** | **44** | **1.8** |
| | | 900 | **44** | **1.6** | **44** | **1.6** | **44** | **1.7** | **44** | **1.7** |
| | Canada | 925 | **44** | **1.5** | **44** | **1.5** | **44** | **1.6** | **44** | **1.6** |
| | 2001 (611) | 950 | **44** | **1.4** | **44** | **1.5** | **44** | **1.5** | **44** | **1.6** |
| | to | 975 | **44** | **1.3** | **44** | **1.4** | **44** | **1.4** | **44** | **1.5** |
| | 4500 (1372) | 1000 | **44** | **1.3** | **44** | **1.3** | **44** | **1.4** | **44** | **1.4** |
| U.S.A. Only | | 775 | 43 | 1.7 | 43 | 1.8 | 43 | 1.8 | 42 | 1.5 |
| | | 800 | **44** | **1.8** | 43 | 1.7 | 43 | 1.7 | 43 | 1.8 |
| | 3001 | 825 | **44** | **1.7** | **44** | **1.8** | **44** | **1.8** | 43 | 1.7 |
| | (915) | 850 | **44** | **1.6** | **44** | **1.7** | **44** | **1.7** | **44** | **1.8** |
| | to | 875 | **44** | **1.5** | **44** | **1.6** | **44** | **1.6** | **44** | **1.7** |
| | | 900 | **44** | **1.4** | **44** | **1.5** | **44** | **1.5** | **44** | **1.6** |
| | 4000 | 925 | **44** | **1.4** | **44** | **1.4** | **44** | **1.5** | **44** | **1.5** |
| | (1219) | 950 | **44** | **1.3** | **44** | **1.3** | **44** | **1.4** | **44** | **1.4** |
| U.S.A. Only | | 750 | 43 | 1.7 | 43 | 1.7 | 43 | 1.8 | 43 | 1.8 |
| | | 775 | **44** | **1.8** | 43 | 1.6 | 43 | 1.7 | 43 | 1.7 |
| | 4001 | 800 | **44** | **1.7** | **44** | **1.7** | **44** | **1.8** | 43 | 1.6 |
| | (1220) | 825 | **44** | **1.6** | **44** | **1.6** | **44** | **1.7** | **44** | **1.8** |
| | | 850 | **44** | **1.5** | **44** | **1.5** | **44** | **1.6** | **44** | **1.7** |
| | to | 875 | **44** | **1.4** | **44** | **1.5** | **44** | **1.5** | **44** | **1.6** |
| | 5000 | 900 | **44** | **1.3** | **44** | **1.4** | **44** | **1.4** | **44** | **1.5** |
| | (1524) | 925 | **44** | **1.3** | **44** | **1.3** | **44** | **1.4** | **44** | **1.4** |
| U.S.A. Only | | 725 | 43 | 1.7 | 43 | 1.7 | 43 | 1.8 | 43 | 1.8 |
| | 5001 | 750 | **44** | **1.8** | **44** | **1.8** | 43 | 1.7 | 43 | 1.7 |
| | (1525) | 775 | **44** | **1.7** | **44** | **1.7** | **44** | **1.8** | **44** | **1.8** |
| | to | 800 | **44** | **1.6** | **44** | **1.6** | **44** | **1.7** | **44** | **1.7** |
| | | 825 | **44** | **1.5** | **44** | **1.5** | **44** | **1.6** | **44** | **1.6** |
| | | 850 | **44** | **1.4** | **44** | **1.4** | **44** | **1.5** | **44** | **1.5** |
| | 6000 | 875 | **44** | **1.3** | **44** | **1.3** | **44** | **1.4** | **44** | **1.4** |
| | (1829) | 900 | **44** | **1.2** | **44** | **1.3** | **44** | **1.3** | **44** | **1.4** |
| U.S.A. Only | | 675 | 43 | 1.8 | 43 | 1.8 | 42 | 1.5 | 42 | 1.6 |
| | 6001 | 700 | 43 | 1.6 | 43 | 1.7 | 43 | 1.7 | 43 | 1.8 |
| | (1830) | 725 | **44** | **1.7** | **44** | **1.8** | 43 | 1.6 | 43 | 1.7 |
| | to | 750 | **44** | **1.6** | **44** | **1.7** | **44** | **1.7** | **44** | **1.8** |
| | | 775 | **44** | **1.5** | **44** | **1.6** | **44** | **1.6** | **44** | **1.7** |
| | 7000 | 800 | **44** | **1.4** | **44** | **1.5** | **44** | **1.5** | **44** | **1.6** |
| | (2133) | 825 | **44** | **1.3** | **44** | **1.4** | **44** | **1.4** | **44** | **1.5** |
| | | 850 | **44** | **1.3** | **44** | **1.3** | **44** | **1.4** | **44** | **1.4** |

* Orifice numbers shown in **BOLD** are factory-installed.

A150571

**Table 3 - Orifice Size and Manifold Pressure (in. w.c.) for Gas Input Rate (continued)**
**26,000 BTUH ONLY**

**ORIFICE SIZE* AND MANIFOLD PRESSURE (IN WC) FOR GAS INPUT RATE**
**(TABULATED DATA BASED ON 13,000 BTUH PER BURNER, DERATED 2%/1000 FT (305M) ABOVE SEA LEVEL**

| | | | | | | | | | | |
|---|---|---|---|---|---|---|---|---|---|---|
| U.S.A. Only | | **650** | 43 | 1.7 | 43 | 1.8 | 42 | 1.5 | 42 | 1.6 |
| | **7001** | **675** | **44** | **1.8** | 43 | 1.7 | 43 | 1.7 | 43 | 1.8 |
| | **(2134)** | **700** | **44** | **1.7** | **44** | **1.8** | **44** | **1.8** | 43 | 1.7 |
| | **to** | **725** | **44** | **1.6** | **44** | **1.7** | **44** | **1.7** | **44** | **1.8** |
| | | **750** | **44** | **1.5** | **44** | **1.5** | **44** | **1.6** | **44** | **1.6** |
| | **8000** | **775** | **44** | **1.4** | **44** | **1.4** | **44** | **1.5** | **44** | **1.5** |
| | **(2438)** | **800** | **44** | **1.3** | **44** | **1.4** | **44** | **1.4** | **44** | **1.4** |
| | | **825** | **44** | **1.2** | **44** | **1.3** | **44** | **1.3** | **44** | **1.4** |
| U.S.A. Only | | **625** | 43 | 1.7 | 43 | 1.8 | 43 | 1.8 | 42 | 1.6 |
| | **8001** | **650** | **44** | **1.8** | 43 | 1.7 | 43 | 1.7 | 43 | 1.8 |
| | **(2439)** | **675** | **44** | **1.7** | **44** | **1.8** | **44** | **1.8** | 43 | 1.6 |
| | **to** | **700** | **44** | **1.6** | **44** | **1.6** | **44** | **1.7** | **44** | **1.7** |
| | | **725** | **44** | **1.5** | **44** | **1.5** | **44** | **1.6** | **44** | **1.6** |
| | **9000** | **750** | **44** | **1.4** | **44** | **1.4** | **44** | **1.5** | **44** | **1.5** |
| | **(2743)** | **775** | **44** | **1.3** | **44** | **1.3** | **44** | **1.4** | **44** | **1.4** |
| U.S.A. Only | **9001** | **600** | 43 | 1.7 | 43 | 1.8 | 43 | 1.8 | 42 | 1.6 |
| | **(2744)** | **625** | **44** | **1.8** | 43 | 1.6 | 43 | 1.7 | 43 | 1.7 |
| | **to** | **650** | **44** | **1.7** | **44** | **1.7** | **44** | **1.8** | **44** | **1.8** |
| | | **675** | **44** | **1.6** | **44** | **1.6** | **44** | **1.7** | **44** | **1.7** |
| | **10000** | **700** | **44** | **1.4** | **44** | **1.5** | **44** | **1.5** | **44** | **1.6** |
| | **(3048)** | **725** | **44** | **1.3** | **44** | **1.4** | **44** | **1.4** | **44** | **1.5** |

* Orifice numbers shown in **BOLD** are factory-installed.

# CHECKOUT

1. Observe unit operation through two (2) complete heating cycles.
2. See Sequence of Operation in furnace Installation, Start-Up, and Operating Instructions.
3. Set room thermostat to desired temperature.

A150572

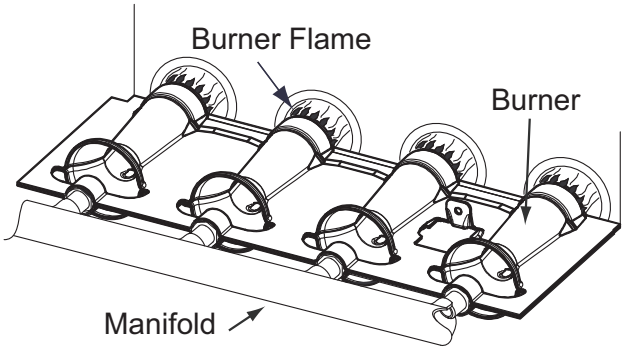


A11461

**Figure 11 - Burner Flame**

# LABEL APPLICATION

1. Fill in Conversion Responsibility Label 344966-204 and apply to blower door of furnace as shown. Date, name, and address of organization making this conversion are required. See Figure 13.
2. Attach Conversion Rating Plate Label 344966-201 to outer door of furnace. See Figure 13.
3. Apply Gas Control Conversion Label to gas valve: For single-stage gas valve apply label 344966-202 to gas valve. Check for correct normal operating sequence of the ignition system as described in furnace Installation, Start-Up, and Operating Instructions.
4. Replace control access door, blower door and outer door of furnace.

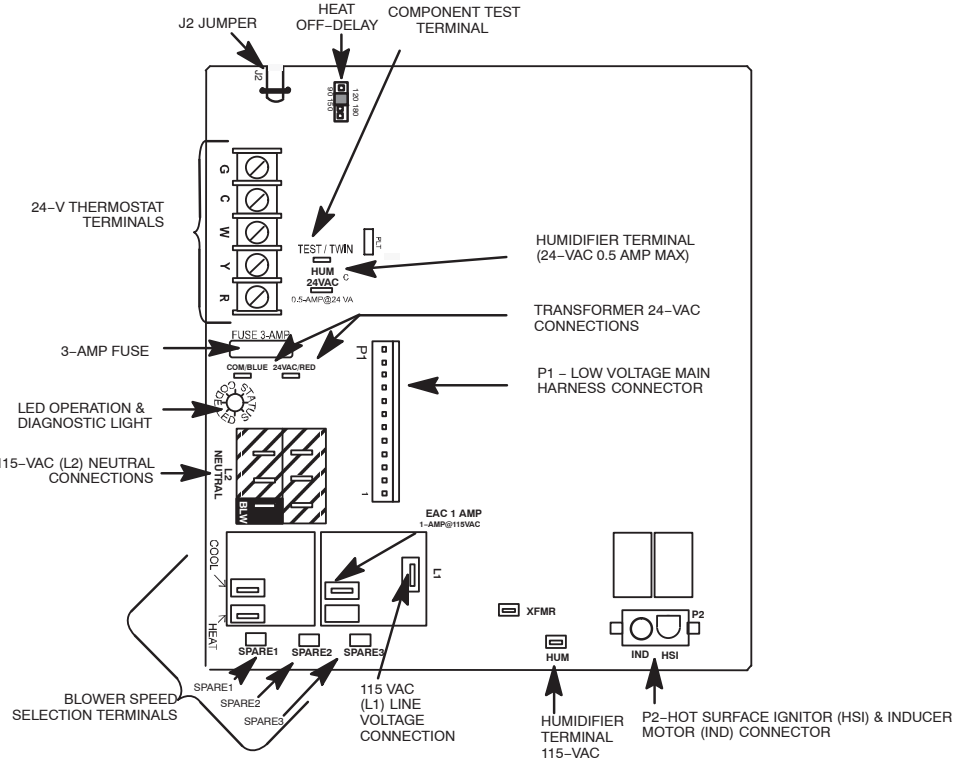


Representative drawing only, some models may vary in appearance.

L13F013

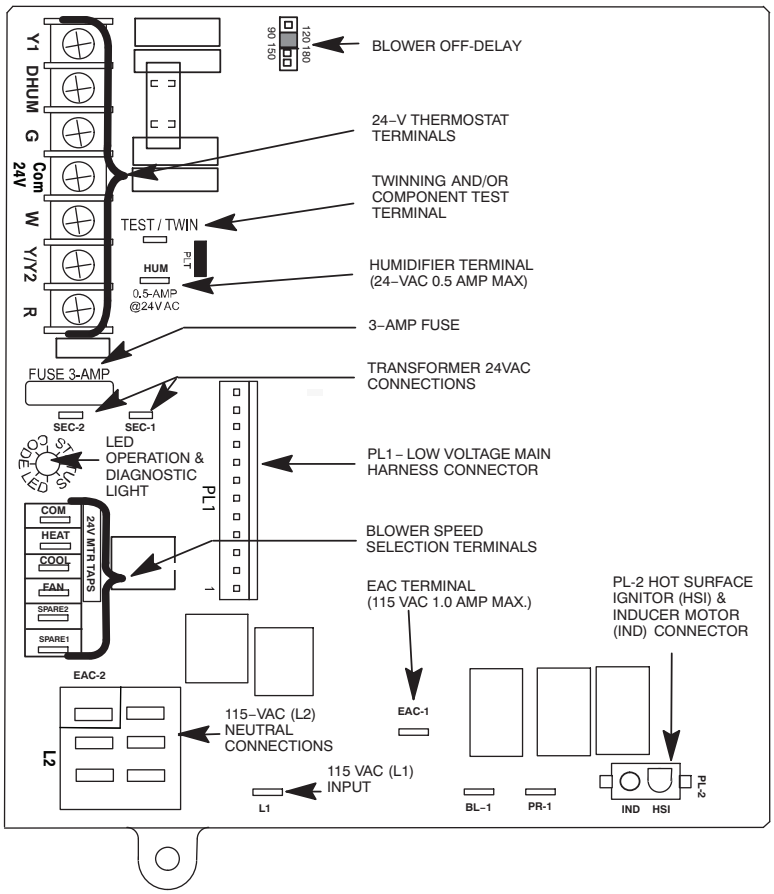


Representative drawing only, some models may vary in appearance.

A11391

**Figure 12 – Single-Stage Furnace Control**

## CONVERSION KIT RATING PLATE

**THIS APPLIANCE HAS BEEN CONVERTED TO USE NATURAL GAS FOR FUEL. REFER TO KIT INSTRUCTIONS FOR CONVERSION PROCEDURES. USE PARTS SUPPLIED BY MANUFACTURER AND INSTALLED BY QUALIFIED PERSONNEL. SEE EXISTING RATING PLATE FOR APPLIANCE MODEL NO. AND INPUT RATING.**

NOTE: Furnace gas input rate on rating plate is for installations up to 2000 ft. (610m) above sea level. In U.S.A. the input rating for altitudes above 2000 ft. (610m) must be derated by 2% for each 1000 ft. (305m) above sea level. In Canada the input rating must be derated (per chart below) for altitudes of 2000 ft. (610m) to 4500 ft. (1372m) above sea level.

KIT NO.: AGAGCAPNL01A (SUPERSEDES: KGAPN46011SP,NAHA01201NG)

FUEL USED: NATURAL GAS

| APPLIANCE MODELS | USA % DERATE PER 1000 FT. | CANADA % DERATE FOR 2000-4500 FT. |
|---|---|---|
| 26K INPUT UNITS ONLY 59S(P/C), 9(1/2)5S, PG95S, PG95ES, (F/G)9MXE, (N/R)9MS, (N/R)95ES, WFS | 2% | 5% |

| NATURAL GAS PRESSURE | | IN. W.C. (PO C.E.) | PA |
|---|---|---|---|
| Max. Inlet Gas Pressure (Press. Max. D'Admission De Gaz) | | 13.6 | 3,386 |
| Min. Inlet Gas Pressure (Press. Min. D'Admission De Gaz) | | 4.5 | 1,121 |
| (For Purpose of Input Adjustment) | | (Pour L'Adjustment D'Entree) | |
| | ALTITUDE | | |
| Manifold Pressure | 0-2,000 ft. (0 - 610 m) | 1.2 - 1.8 | 299 - 448 |
| Pression Tubulure | 2,000 - 10,000 ft. (610 - 3050 m) | Refer to Installation Manual Respecter les Instruction D'Installation | |

344966-201 REV.B

This control has been adjusted for use with naturel gas.
Ce contrôle a été réglée pour fonctionner au gaz naturel.
344966-202 REV.B

**LABEL NOT USED**

## PLAQUE SIGNALÉTIQUE DE LA TROUSSE DE CONVERSION

**CET APPAREIL A ÉtÉ CONVERTI POUR UNE COMBUSTION AU GAZ NATUREL. SE RÉFÉRER AUX INSTRUCTIONS DE L'ÉQUIPEMENT POUR LES PROCÉDURES DE CONVERSION. N'UTILISER QUE DES PIÉCES FOURNIES PAR LE MANUFACTURIER ET INSTALLÉES PAR DU PERSONNEL QUALIFIÉ. VOIR LA PLAQUE SIGNALÉTIQUE EXISTANTE POUR LE MODÈLE D'APPAREIL ET LA CONSOMMATION.**

NOTE: La consommation de gaz de la fournaise indiquée sur la plaque signalétique est exacte pour des installations jusqu'à 2000 pieds (610m) au dessus du niveau de la mer. Aux E.U., la consommation pour des altitudes au dessus de 1000 pieds (610m) doit être réduite de 2% pour chaque 1000 pieds (305m) d'élévation au dessus du niveau de la mer. Au Canada, la consommation doit être réduite de 5% entre les altitudes de 2000 pieds (610m) à 4500 pieds (1372m).

KIT NO.: AGAGCAPNL01A (SUPPLANT: KGAPN46011SP,NAHA01201NG)

COMBUSTIBLE: GAZ NATUREL

| APPOUVÉ POUR LES MODÉLES | USA % DERATE PER 1000 FT. | CANADA % DERATE FOR 2000-4500 FT. |
|---|---|---|
| 26K UNITÉS ENTRÉE SEULEMENT 59S(P/C), 9(1/2)5S, PG95S, PG95ES, (F/G)9MXE, (N/R)9MS, (N/R)95ES, WFS | 2% | 5% |

| PRESSION GAZ NATUREL | | IN. W.C. (PO C.E.) | PA |
|---|---|---|---|
| Max. Inlet Gas Pressure (Press. Max. D'Admission De Gaz) | | 13.6 | 3,386 |
| Min. Inlet Gas Pressure (Press. Min. D'Admission De Gaz) | | 4.5 | 1,121 |
| (For Purpose of Input Adjustment) | | (Pour L'Adjustment D'Entree) | |
| | ALTITUDE | | |
| Manifold Pressure | 0-2,000 ft. (0 - 610 m) | 1.2 - 1.8 | 299 - 448 |
| Pression Tubulure | 2,000 - 10,000 ft. (610 - 3050 m) | Refer to Installation Manual Respecter les Instruction D'Installation | |

344966-203 REV.B

**THIS FURNACE WAS CONVERTED ON _____ TO NATURAL GAS**
(DAY-MONTH-YEAR)
**KIT NO.: AGAGCAPNL01A**

_____

_____

_____

**(Name and address of organization making this conversion), which accepts the responsibility that this conversion has been properly made.**

**CE GÉNÉRATEUR D'AIR CHAUD A ÉTÉ CONVERTILE _____ POUR**
(JOUR-MOIS-ANNÉE)
**DE L'ENSEMBLE Nº.: AGAGCAPNL01A**

**PAR:**

_____

_____

_____

**(Nom et adresse de l'organisme qui a effectué la conversion), qui accepte l' entrière responsabilité de la conversion.**

344966-204 REV.B

A190199

**Figure 13 - Conversion Kit Labels**

Copyright 2019 CAC / BDP ● 7310 W. Morris St. ● Indianapolis, IN 46231

Edition Date: 05/19



**Manufacturer reserves the right to change, at any time, specifications and designs without notice and without obligations.**

Replaces: NEW

Specifications subject to change without notice.