# 14 and 15 SEER Small Package Products
# Air Conditioners and Heat Pumps
# Using R-410A Refrigerant

# Service Manual

## Table of Contents


Safety Considerations . . . . . 2
Introduction . . . . . 2
Installation Guideline . . . . . 2
  New Construction . . . . . 2
  Add-On Replacement (Retrofit) . . . . . 2
Accessories . . . . . 3
Low-Ambient Cooling Guideline . . . . . 4
Minimum Return Temperature - Gas Heating Mode . . . . . 4
  Access Compressor Or Other Internal Cabinet Components . . . . . 4
  Labeling . . . . . 5
Electrical . . . . . 6
  Aluminum Wire . . . . . 6
  Contactor . . . . . 6
  Capacitor . . . . . 6
  Cycle Protector . . . . . 7
  Crankcase Heater . . . . . 7
  Pressure Switches . . . . . 7
  Defrost Thermostats . . . . . 7
  Check Defrost Thermostat . . . . . 7
  Defrost Control Board . . . . . 8
Scroll Compressor . . . . . 10
  Compressor Failures . . . . . 10
  Electrical Failures . . . . . 11
  System Clean-Up After Burnout . . . . . 11
  Compressor Removal and Replacement . . . . . 12
  Outdoor Fan Adjustment . . . . . 12
  Fan Motor . . . . . 12
  Compressor Plug . . . . . 13
  Low-Voltage Terminals . . . . . 13
Refrigeration System . . . . . 14
  Refrigerant . . . . . 14
  Compressor Oil . . . . . 14
  Brazing . . . . . 15
  Reversing Valve . . . . . 15
  Liquid Line Filter Drier . . . . . 16
  Suction Line Filter Drier . . . . . 16
  Accumulator . . . . . 16
  Thermostatic Expansion Valve (TXV) . . . . . 17
  TXV Operation . . . . . 17
  Piston Body Cleaning or Replacement . . . . . 18
  Liquid Tube Strainer/Filter . . . . . 18
Refrigeration System Repair . . . . . 18
  Leak Detection . . . . . 18
  Coil Removal . . . . . 19
  Compressor Removal and Replacement . . . . . 19
  System Clean-Up After Burnout . . . . . 19
  Evacuation . . . . . 20
  Check Charge . . . . . 20
  Troubleshooting with SuperHeat . . . . . 20
  Indoor Airflow and Airflow Adjustments . . . . . 21
  ECM Fan Motor Troubleshooting . . . . . 27
  Time Delays . . . . . 27
  Pressure Switches . . . . . 27
  Accumulator, Reversing Valve (RVS) . . . . . 28
  Control Box . . . . . 28
Single Stage Gas Heat . . . . . 29
  Start-up Heating and Make Adjustments . . . . . 29
  Inducer Draft Blower Assembly Removal . . . . . 34
Two-Stage Gas Heat . . . . . 38
  Start-up Gas Heating and Make Adjustments . . . . . 38
Care and Maintenance . . . . . 43
  Desert and Seacoast Locations . . . . . 43
  Cleaning Coil . . . . . 43
  Cleaning Outdoor Fan Motor and Blade . . . . . 43
  Electrical Controls and Wiring . . . . . 43
  Refrigerant Circuit . . . . . 43
  Final Check-Out . . . . . 43
Air Conditioner Troubleshooting Chart . . . . . 45
Heat Pump Troubleshooting Heating Cycle . . . . . 46
Heat Pump Troubleshooting Cooling Cycle . . . . . 47


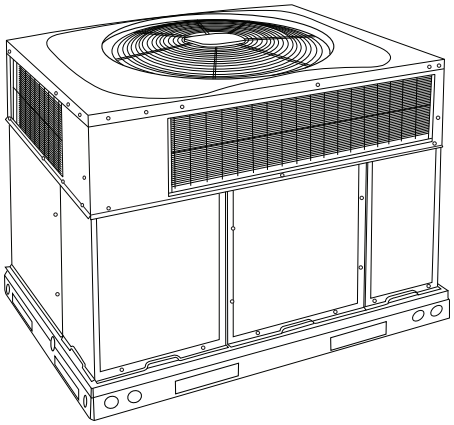

14 SEER A/C & Heat Pump

A09034

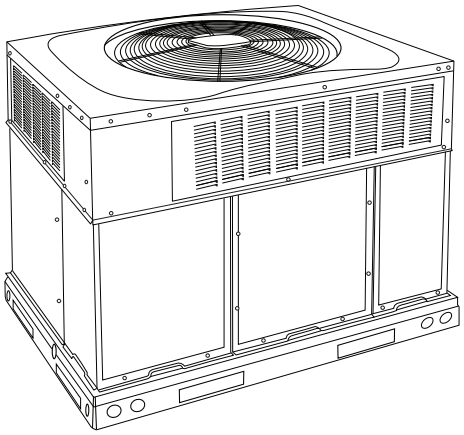

15 SEER A/C & Heat Pump

A09033

**Fig. 1 – A/C and Heat Pump**

**Manufacturer reserves the right to change, at any time, specifications and designs without notice and without obligations.**

## Safety Considerations

Installation, service, and repair of these units should be attempted only by trained service technicians familiar with standard service instruction and training material.

All equipment should be installed in accordance with accepted practices and unit Installation Instructions, and in compliance with all national and local codes. Power should be turned off when servicing or repairing electrical components. Extreme caution should be observed when troubleshooting electrical components with power on. Observe all warning notices posted on equipment and in instructions or manuals.

**⚠ WARNING**

**UNIT OPERATION AND SAFETY HAZARD**

Failure to follow this warning could result in personal injury or equipment damage.

R-410A systems operate at higher pressures than standard R-22 systems. Do not use R-22 service equipment or components on these R-410A units. Ensure service equipment is rated for R-410A.

**⚠ CAUTION**

**CUT HAZARD**

Failure to follow this caution may result in personal injury.

When removing access panels (see Fig. 42) or performing maintenance functions inside your unit, be aware of sharp sheet metal parts and screws. Although special care is taken to reduce sharp edges to a minimum, be extremely careful and wear appropriate clothing, safety glasses and gloves when handling parts or reaching into the unit.

Refrigeration systems contain refrigerant under pressure. Extreme caution should be observed when handling refrigerants. Wear safety glasses and gloves to prevent personal injury. During normal system operations, some components are hot and can cause burns. Rotating fan blades can cause personal injury. Appropriate safety considerations are posted throughout this manual where potentially dangerous techniques are addressed.

Follow all safety codes. Wear safety glasses, protective clothing, and work gloves. Have a fire extinguisher available. Read these instructions thoroughly and follow all warnings or cautions included in literature and attached to the unit. Consult local building codes, the current editions of the National Electrical Code (NEC) NFPA 70 and NFPA 90B-Installation Warm Air Heating and A/C Systems (Residential).

In Canada refer to the current editions of the Canadian Electrical Code CSA C22.1.

## Introduction

This document provides required system information necessary to install, service, repair or maintain the small package products (SPP) air conditioners and heat pumps using R-410A refrigerant.

Refer to the unit Product Data/Technical specifications for rating information, electrical data, required clearances, additional component part numbers and related pre-sale data. Installation Instructions are also available per specific models.

Information in this document refers to units produced in 2015 to current.

## Installation Guideline

### New Construction

Specifications for these units in the new construction market require the unit to be installed outdoors and meet all local code and requirements. Consult the Installation Instructions for any additional installation detail.

### Add-On Replacement (Retrofit)

Specifications for these units in the add-on replacement/retrofit market require the unit to be installed outdoors and meet all local codes and requirements. Clearances, power supply, system static needs to be check to ensure that the replacement unit can perform within the design parameter desired specified in the Product Data.

# Accessories

**Table 1 – Required Field-Installed Accessories for Air Conditioners and Heat Pumps**

| Item | Description | Factory Installed Option (Select Models Only) | Field Installed Accessory |
|---|---|---|---|
| Coil Options | Base unit with tin plated indoor coil hairpins | X | |
| Compressor Start Kit | Compressor Start Kit assists compressor start-up by providing additional starting torque on sing phase units only. | | X |
| Corporate Thermostats | Thermostats provide control for the system heating and cooling functions. | | X |
| Crankcase Heater* | Crankcase Heater provides anti-floodback protection for low-load cooling applications. | | X |
| Curb Adaptor† | Adapter curb for new unit with base rail installed on existing curb. | | X |
| Dual Point Electric Heaters† | Allows you to power the electric heater and unit contactor separately by having two individual field power supply circuits connected respectively. | | X |
| Economizer | Horizontal Economizer with solid state controls and barometric relief dampers includes filter racks and provide outdoor air during cooling and reduce compressor operation. | | X |
| | Vertical Economizer with solid state controls and barometric relief dampers includes filter racks and provide outdoor air during cooling and reduce compressor operation. | | X |
| Electric Heaters† | Electric Heat Supplement | | X |
| Filter Rack‡ | Filter Rack features easy installation, serviceability, and high-filtering performance for vertical applications. Includes 1-in. filter. | X | X |
| Flat Roof Curb | 14-in. (356 mm) Flat Roof Curb is available for roof mounted applications. | | X |
| Flue Discharge Deflector1 | Directs flue gas exhaust 90 degrees upward from current discharge. | | X |
| Gasket Kit† | For field modified existing roof curb with new base rail unit. | | X |
| Heat Exchanger** | Stainless Steel Heat Exchanger | X | |
| High Altitude Propane Conversion Kit** | High Altitude Propane Conversion Kit is for use at 2001 to 6000 ft. (611-1829 m) above sea level. Kit consists of propane gas orifices that compensate for gas heat operation at high altitude. | | X |
| Low Ambient Kit | Low Ambient Kit (Motormaster II Control) allows the use of mechanical cooling down to outdoor temperatures as low as 0°F (-18°C) when properly installed. | | X |
| Manual Outside Air Damper | Manual Outside Air Damper includes hood and filter rack with adjustable damper blade for up to 25% outdoor air. | | X |
| Natural to Propane Gas Conversion Kit** | Natural to Propane Gas Conversion Kit allows for conversion from natural gas to propane gas (0-2000 ft) (0-610 m) | | All gas heat models, except Ultra Low NOx |
| Propane to Natural Gas Conversion Kit** | Propane to Natural Gas Conversion Kit allows for conversion from propane to natural gas for altitudes of 0-2000 ft (0-610 m) | | All gas heat models, except Ultra Low NOx |
| Square-to-Round Duct Transition Kit | Square-to-Round Duct Transition Kit enable 24-48 size units to be fitted to 14 in. (356 mm) round ductwork. | | X |
| Time Guard II | Automatically prevents the compressor from restarting for at least 4 minutes and 45 seconds after shutdown of the compressor. Not required when a corporate programmable thermostat is applied or with a RTU-MP control. | | X |
| Louver Metal Outdoor Coil Grilles | Louver Metal Outdoor Coil Grilles provide hail and vandalism protection. | | Select Models |
| Cabinet Leakage†† | Certified to leak 2% or less of nominal air conditioning CFM delivered when pressurized to 1-in. W.C. With all present air inlets, air outlets, and condensate drain port(s) sealed. | X | |
| Low Pressure Switch Kit†† | This kit is designed for use when a low pressure control is desired. | | X |

*. Refer to Price Page for application detail.
†. Electric Models Only (No Gas Heating)
‡. Available only on 15 SEER Models
**. Gas-Fired Heating Models Only. Except Ultra Low NOx Models.
††. Available only on selected 14 SEER Models

**Manufacturer reserves the right to change, at any time, specifications and designs without notice and without obligations.**

## Low-Ambient Cooling Guideline

The minimum operating temperature for these units in cooling mode is 40°F/4.°C outdoor ambient without additional accessories. This equipment may be operated in cooling mode at ambient temperatures below 40°F/4.4°C when the accessories listed in Table 1 are installed.

## Minimum Return Temperature - Gas Heating Mode

In gas heating mode, this unit is designed for a minimum continuous return-air temperature of 55°F (13°C) db and a maximum continuous temperature of 80°F (27°C) db. Failure to follow these return-air temperature limits may affect reliability of heat exchangers, motors, and other components.

## Access Compressor Or Other Internal Cabinet Components

**NOTE:** Access to most of the components through the front panels of the unit. The top will need to be removed to access the condenser coil.

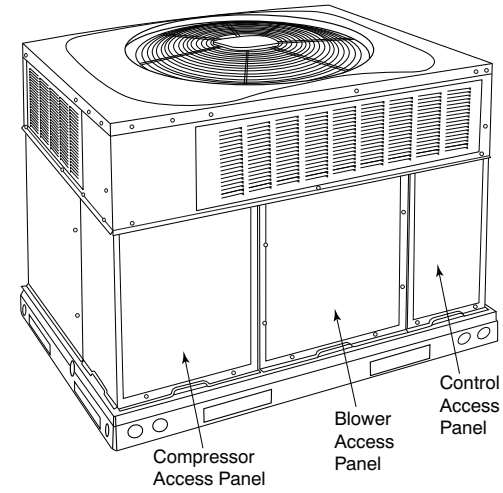


A09211

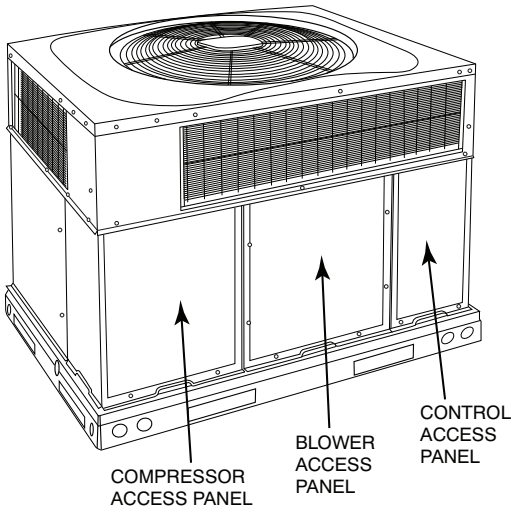


A09207

**Fig. 2 – Unit Access Panels**

## Labeling

The wiring schematic, sub-cooling charging tables with instructions, and warning labels. Refer to Fig. 3 for label location.

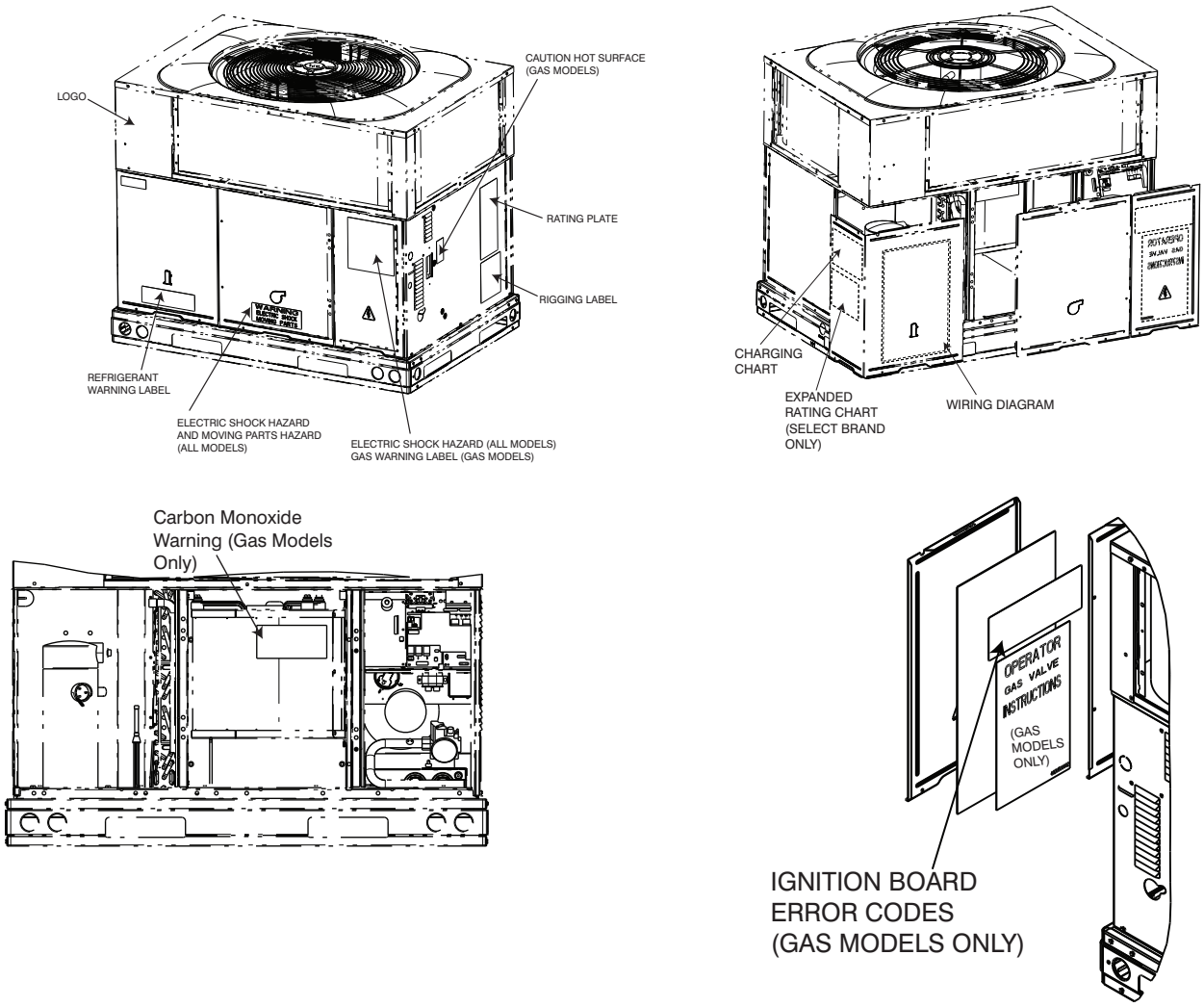


**Fig. 3 – Label Location**

# Electrical

**WARNING**

**ELECTRICAL SHOCK HAZARD**

Failure to follow this warning could result in personal injury or death.

Exercise extreme caution when working on any electrical components. Shut off all power to system prior to troubleshooting. Some troubleshooting techniques require power to remain on. In these instances, exercise extreme caution to avoid danger of electrical shock. ONLY TRAINED SERVICE PERSONNEL SHOULD PERFORM ELECTRICAL TROUBLESHOOTING.

## Aluminum Wire

**CAUTION**

**UNIT OPERATION AND SAFETY HAZARD**

Failure to follow this caution may result in equipment damage or improper operation.

Aluminum wire may be used in the branch circuit (such as the circuit between the main and unit disconnect), but only copper wire may be used between the unit disconnect and the unit.

Whenever aluminum wire is used in branch circuit wiring with this unit, adhere to the following recommendations.

Connections must be made in accordance with the National Electrical Code (NEC), using connectors approved for aluminum wire. The connectors must be UL approved (marked Al/Cu with the UL symbol) for the application and wire size. The wire size selected must have a current capacity not less than that of the copper wire specified, and must not create a voltage drop between service panel and unit in excess of 2% of unit rated voltage. To prepare wire before installing connector, all aluminum wire must be “brush-scratched” and coated with a corrosion inhibitor such as Pentrox A. When it is suspected that connection will be exposed to moisture, it is very important to cover entire connection completely to prevent an electrochemical action that will cause connection to fail very quickly. Do not reduce effective size of wire, such as cutting off strands so that wire will fit a connector. Proper size connectors should be used. Check all factory and field electrical connections for tightness. This should also be done after unit has reached operating temperatures, especially if aluminum conductors are used.

## Contactor

The contactor provides a means of applying power to unit using low voltage (24v) from transformer in order to power contactor coil. Depending on unit model, you may encounter single- or double-pole contactors. Exercise extreme caution when troubleshooting as 1 side of line may be electrically energized. The contactor coil is powered by 24vac. If contactor does not operate:

1. With power off, check whether contacts are free to move. Check for severe burning or arcing on contact points.
2. With power off, use ohmmeter to check for continuity of coil. Disconnect leads before checking. A low resistance reading is normal. Do not look for a specific value, as different part numbers will have different resistance values.
3. Reconnect leads and apply low-voltage power to contactor coil. This may be done by leaving high-voltage power to outdoor unit off and turning thermostat to cooling. Check voltage at coil with voltmeter. Reading should be between 20v and 30v. Contactor should pull in if voltage is correct and coil is good. If contactor does not pull in, replace contactor.
4. With high-voltage power off and contacts pulled in, check for continuity across contacts with ohmmeter. A very low or 0 resistance should be read. Higher readings could indicate burned or pitted contacts which may cause future failures.

## Capacitor

**WARNING**

**ELECTRICAL SHOCK HAZARD**

Failure to follow this warning could result in personal injury or equipment damage.

Capacitors can store electrical energy when power is off. Electrical shock can result if you touch the capacitor terminals and discharge the stored energy. Exercise extreme caution when working near capacitors. With power off, discharge stored energy by shorting across the capacitor terminals with a 15,000-ohm, 2-watt resistor.

**WARNING**

**ELECTRICAL SHOCK HAZARD**

Failure to follow this warning could result in personal injury or equipment damage.

Always check capacitors with power off. Attempting to troubleshoot a capacitor with power on can be dangerous. Defective capacitors may explode when power is applied. Insulating fluid inside is combustible and may ignite, causing burns.

Capacitors are used as a phase-shifting device to aid in starting certain single-phase motors. Check capacitors as follows:

1. With power off, discharge capacitors as outlined above. Disconnect capacitor from circuit. Put ohmmeter on R X 10k scale. Using an analog ohmmeter, check each terminal to ground (use capacitor case). Discard any capacitor which measures 1/2 scale deflection or less. Place ohmmeter leads across capacitor and place on R X 10k scale. Meter should jump to a low resistance value and slowly climb to higher value. Failure of meter to do this indicates an open capacitor. If resistance stays at 0 or a low value, capacitor is internally shorted.
2. Capacitance testers are available which will read value of capacitor. If value is not within ±10 percent value stated on capacitor, it should be replaced. If capacitor is not open or shorted, the capacitance value is calculated by measuring voltage across capacitor and current it draws.

**WARNING**

**ELECTRICAL SHOCK HAZARD**

Failure to follow this warning could result in personal injury or death.

Exercise extreme caution when taking readings while power is on.

Use following formula to calculate capacitance:

Capacitance (mfd)= (2650 X amps)/volts

3. Remove any capacitor that shows signs of bulging, dents, or leaking. Do not apply power to a defective capacitor as it may explode.

Sometimes under adverse conditions, a standard run capacitor in a system is inadequate to start compressor. In these instances, a start assist device is used to provide an extra starting boost to compressor motor. This device is called a positive temperature coefficient (PTCR or PTC) or start thermistor. It is a resistor wired in parallel with the run capacitor. As current flows through the PTC at start-up, it heats up. As PTC heats up, its resistance increases greatly until it effectively lowers the current

through itself to an extremely low value. This, in effect, removes the PTC from the circuit.

After system shutdown, resistor cools and resistance value returns to normal until next time system starts. Thermistor device is adequate for most conditions, however, in systems where off cycle is short, device cannot fully cool and becomes less effective as a start device. It is an easy device to troubleshoot. Shut off all power to system.

Check thermistor with ohmmeter as described below. Shut off all power to unit. Remove PTC from unit. Wait at least 10 minutes for PTC to cool to ambient temperature.

Measure resistance of PTC with ohmmeter.

The cold resistance (RT) of any PTC device should be approximately 100-180 percent of device ohm rating.

12.5-ohm PTC = 12.5-22.5 ohm resistance (beige color)

If PTC resistance is appreciably less than rating or more than 200 percent higher than rating, device is defective.

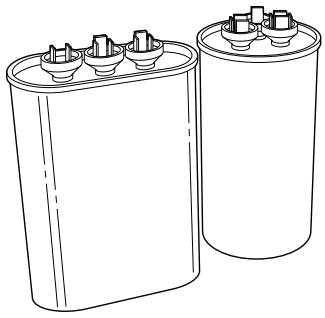

A94006

**Fig. 4 – Capacitors**

## Cycle Protector

Corporate thermostats have anti-cycle protection built in to protect the compressor. If cycle protection is needed, consult factory authorized aftermarket offering.

## Crankcase Heater

Crankcase heater is a device for keeping compressor oil warm. By keeping oil warm, refrigerant does not migrate to and condense in compressor shell when the compressor is off. This prevents flooded starts which can damage compressor.

On units that have a single-pole contactor, the crankcase heater is wired in parallel with contactor contacts and in series with compressor. (See Fig. 5 or Fig. 6.) When contacts open, a circuit is completed from line side of contactor, through crankcase heater, through run windings of compressor, and to other side of line. When contacts are closed, there is no circuit through crankcase heater because both leads are connected to same side of line. This allows heater to operate when system is not calling for cooling. The heater does not operate when system is calling for cooling.

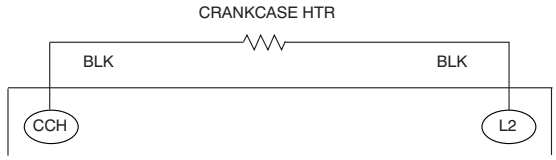


A150123

**Fig. 5 – Wiring for 14 SEER and all Electric/Heat Pump Models**

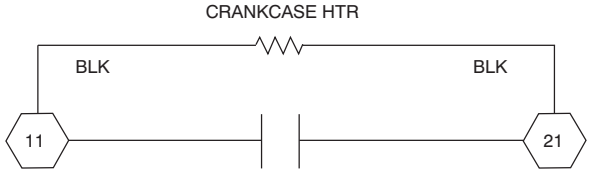


A10174

**Fig. 6 – Wiring for 14 and 15 SEER 230 Volt Gas Models**

## Pressure Switches

Pressure switches are protective devices wired into control circuit (low voltage). They shut off compressor if abnormally high or low pressures are present in the refrigeration circuit. R-410A pressure switches are specifically designed to operate with R-410A systems. R-22 pressure switches must not be used as replacements for the R-410A air conditioners or heat pumps.

### Loss of Charge Switch (Low-Pressure Switch)

Select units have a loss of charge switch. The 15 and selected 14 SEER models have a loss of charge switch located downstream of the liquid line filter drier. See loss of charge for more details. Two-stage models have a loss of charge switch located on the suction line.

### High-Pressure Switch (AC & HP)

The high-pressure switch is located in the discharge line or liquid line and protects against excessive condenser coil pressure. It opens around 650 psig and closes at 420 (+/- 25) psig for R-410A. High pressure may be caused by a dirty condenser coil, failed fan motor, or condenser air re-circulation.

To check switch:

1. Turn off all power to unit.
2. Disconnect leads on switch.
3. Apply ohmmeter leads across switch. You should have continuity on a good switch.

**NOTE:** Because these switches are attached to refrigeration system under pressure, it is not advisable to remove this device for troubleshooting unless you are reasonably certain that a problem exists. If switch must be removed, remove and recover all system charge so that pressure gauges read 0 psig. Never open system without breaking vacuum with dry nitrogen.

**⚠ CAUTION**

**PERSONAL INJURY HAZARD**

Failure to follow this caution may result in personal injury.

Wear safety glasses, protective clothing, and gloves when handling refrigerant.

### To replace switch:

1. Apply heat with torch to solder joint and remove switch.

**⚠ CAUTION**

**PERSONAL INJURY HAZARD**

Failure to follow this caution may result in personal injury.

Wear safety glasses when using torch. Have quenching cloth available. Oil vapor in line may ignite when switch is removed.

2. Braze in a new pressure switch.

## Defrost Thermostats

Defrost thermostat signals heat pump that conditions are right for defrost or that conditions have changed to terminate defrost. It is a thermally actuated switch clamped to outdoor coil to sense its temperature. Normal temperature range is closed at 32° ± 3°F and open at 65° ± 5°F.

## Check Defrost Thermostat

There is a liquid header with a brass distributor and feeder tubes going into outdoor coil. At the end of 1 of the feeder tubes, there is a 3/8-in. OD stub tube approximately 3 in. long. (See Fig. 7.) The defrost thermostat should be located on stub tube. Note that there is only 1 stub tube used with a liquid header, and on most units it is the bottom circuit.

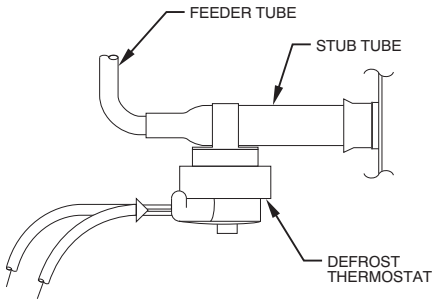


A97517

**Fig. 7 – Defrost Thermostat Location**

**NOTE:** The defrost thermostat must be located on the liquid side of the outdoor coil on the bottom circuit and as close to the coil as possible.

## Defrost Control Board

Troubleshooting defrost control involves a series of simple steps that indicate whether or not board is defective.

**NOTE:** This procedure allows the service technician to check control board and defrost thermostat for defects. First, troubleshoot to make sure unit operates properly in heating and cooling modes. This ensures operational problems are not attributed to the defrost control board.

### Defrost Control

The defrost control is used in all Heat Pump models. Its features include selectable defrost intervals of 30, 60, 90 minutes, and standard defrost speed up capability. This section describes the sequence of operation and trouble shooting methods for this control.

### Cooling Sequence of Operation

On a call for cooling, thermostat makes R-O, R-Y, and R-G. Circuit R-O energizes reversing valve switching it to cooling position. Circuit R-Y sends low voltage through the safeties and energizes the contactor, which starts the compressor and energizes the T1 terminal on the circuit board. This will energize the OF2 fan relay which starts the outdoor fan motor.

When the cycle is complete, R-Y is turned off and compressor and outdoor fan should stop. With corporate thermostats, the O terminal remains energized in the cooling mode. If the mode is switched to heat or Off, the valve is de-energized. There is no compressor delay built into this control.

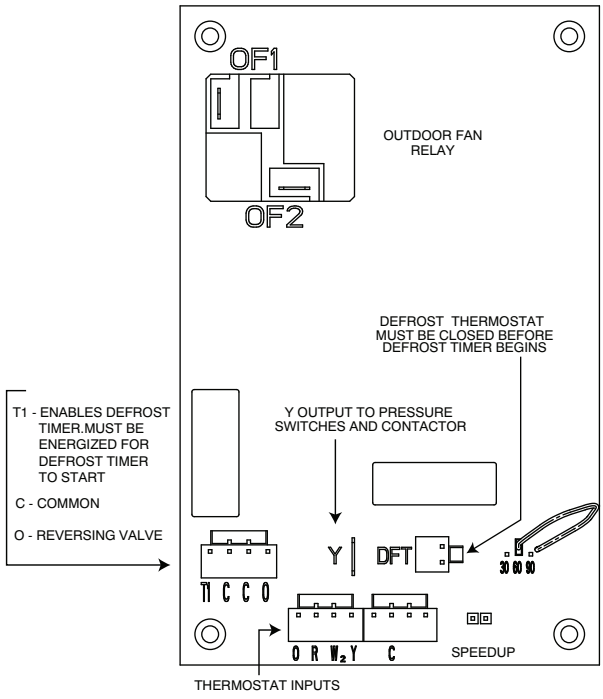


A150622

**Fig. 8 – Defrost Control**

### Heat Pump Heating Sequence of Operation

On a call for heating, thermostat makes R-Y, and R-G. Circuit R-Y sends low voltage through the safeties and energizes the contactor, which starts the compressor and energizes the T1 terminal on the circuit board. The T1 terminal energizes the defrost logic. This will energize the OF2 fan relay start the outdoor motor. The T1 terminal must be energized for defrost to function.

When the cycle is complete, R-Y is turned off and the compressor and outdoor fan should stop. There is no compressor delay built into this control.

### Defrost Sequence

The defrost control is a time/temperature control that has field selectable settings of 30, 60, and 90 minutes. These represent the amount of time that must pass after closure of the defrost thermostat before the defrost sequence begins.

The defrost thermostat senses coil temperature throughout the heating cycle. When the coil temperature reaches the defrost thermostat setting, it will close, which energizes the DFT terminal and begins the defrost timing sequence. When the DTF has been energized for the selected time, the defrost cycle begins, and the control shifts the reversing valve into cooling position, and turns the outdoor fan off. This shifts hot gas flow into the outdoor coil which melts the frost from the coil. The defrost cycle is terminated when defrost thermostat opens, or automatically after 10 minutes.

### Troubleshooting

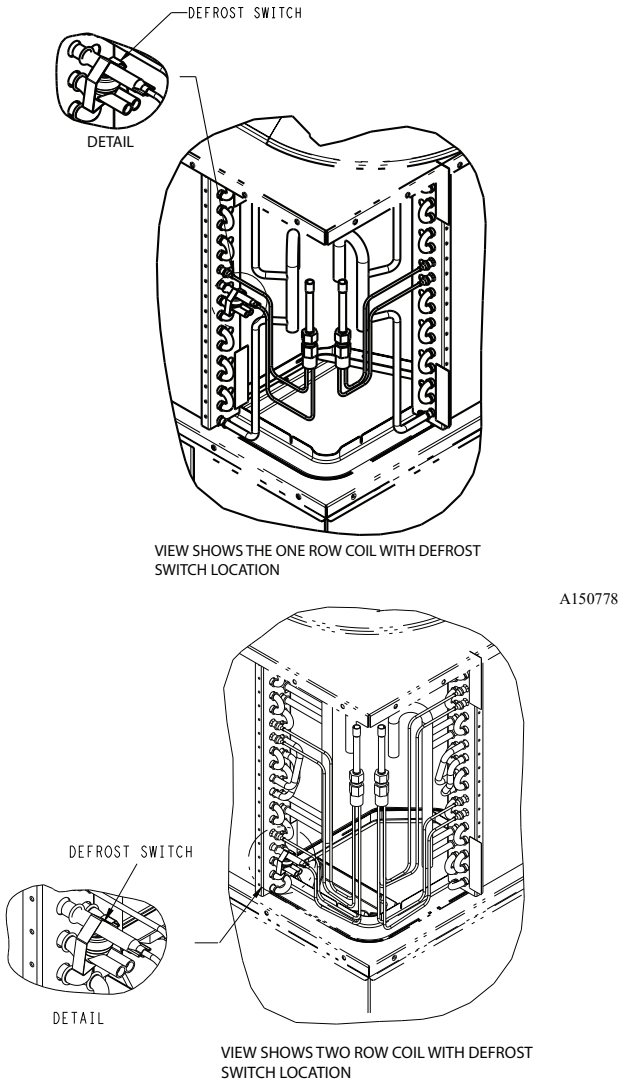


**Fig. 9 – Defrost Switch Location**

**If unit will not run:**

1. Does the Y input has 24 volts from thermostat? If not, check thermostat or wire. If yes proceed to #2
2. The Y spade terminal on the circuit board should have 24 volts if Y input is energized. This output goes through the pressure switches and to the contactor. If 24 volts is present on the Y spade terminal, and the contactor is not closed, check voltage on contactor coil. If no voltage is present, check for opened pressure switch.
3. If voltage is present and contactor is open, contactor may be defective. Replace contactor if necessary.
4. If contactor is closed and unit will still not run, check wiring, capacitor and compressor.

## Defrost Speedup

To test the defrost function on these units, speed up pins are provided on the circuit board. To force a defrost cycle, the defrost thermostat must be closed, or the defrost thermostat pins must be jumpered. Follow the steps below to force a defrost cycle:

1. Jumper the DFT input .
2. Short the speed up pins. This speeds up the defrost timer by a factor of 256. The longer the defrost interval setting, the longer the pins must be shorted to speed through the timing. For example, if interval is 90 min, the speed up will take (90/256)min x (60seconds /minute)= 21 seconds max. This could be shorter depending on how much time has elapsed since the defrost thermostat closed.
3. Remove the short immediately when the unit shifts into defrost. Failure to remove the short immediately will result in a very short forced defrost cycle (the 10 minute timer will be sped through in 2 seconds).
4. When defrost begins, it will continue until the defrost thermostat opens or 10 minutes has elapsed.

**NOTE:** The T1 terminal on the defrost board powers the defrost timing function. This terminal must be energized before any defrost function will occur.

If defrost thermostat is stuck closed:

Whether the unit is in heating or cooling mode, it will run a defrost cycle for 10 minutes each time the compressor has been energized for the selected time interval. The board will terminate automatically after 10 minutes of defrost time regardless of defrost thermostat position.

If defrost thermostat is stuck open:

The unit will not defrost

If unit will not defrost:

1. Perform the speedup function as described above to test the defrost function of the circuit board.
2. If the unit does not go into defrost after performing the speed up, check for 24 volts on the T1 terminal. This terminal powers the defrost circuit, and must be energized before any defrost function can occur. The T1 should be energized once the Y terminal is energized and the pressure switches are closed. Ensure the T1 wire is connected at the contactor, and that 24 volts is present on the T1 terminal.
3. If all voltages are present and unit will still not run defrost, remove thermostat pigtail harness from board and perform checks directly on input pins with jumper wires. The pigtail may have a bad connection or be mis-wired.

To fully troubleshoot defrost thermostat and control function:

1. Turn thermostat to OFF. Shut off all power to outdoor unit.
2. Remove control box cover for access to electrical components and defrost control board.
3. Disconnect defrost thermostat leads from control board, and connect to ohmmeter. Thermostat leads are black, insulated wires connected to DFT and R terminals on control board. Resistance reading may be zero (indicating closed defrost thermostat), or infinity (¥ for open thermostat) depending on outdoor temperature.
4. Jumper between DFT and R terminals on control board as shown in Fig. 8.
5. Disconnect outdoor fan motor lead from OF2. Tape lead to prevent grounding.
6. Turn on power to outdoor unit.
7. Restart unit in heating mode, allowing frost to accumulate on outdoor coil.
8. After a few minutes in heating mode, liquid line temperature at defrost thermostat should drop below closing set point of defrost thermostat of approximately 32°F (0ºC). Check resistance across defrost thermostat leads using ohmmeter. Resistance of zero indicates defrost thermostat is closed and operating properly.
9. Short between the speed-up terminals using a thermostat screwdriver. This reduces the timing sequence to 1/256 of original time. (See Table 2.)

**Table 2 – Defrost Control Speed-Up Timing Sequence**

| Parameter | Minimum (Minutes) | Maximum (Minutes) | Speed-up (Nominal) |
|---|---|---|---|
| 30-minute cycle | 27 | 33 | 7 sec |
| 50-minute cycle | 45 | 55 | 12 sec |
| 90-minute cycle | 81 | 99 | 21 sec |
| 10-minute cycle | 9 | 11 | 2 sec |

**⚠ CAUTION**

**UNIT DAMAGE HAZARD**

Failure to follow this caution may result in equipment damage or improper operation.

Exercise extreme caution when shorting speed-up pins. If pins are accidentally shorted to other terminals, damage to the control board will occur.

10. Unit is now operating in defrost mode. Check between C and W2 using voltmeter. Reading on voltmeter should indicate 24v. This step ensures defrost relay contacts have closed, energizing supplemental heat (W2) and reversing valve solenoid (O).
11. Unit should remain in defrost no longer than 10 minutes. Actual time in defrost depends on how quickly speed-up jumper is removed. If it takes 2 sec to remove speed-up jumper after unit has switched to defrost, the unit will switch back to heat mode.
12. After a few minutes, in defrost (cooling) operation, liquid line should be warm enough to have caused defrost thermostat contacts to open. Check resistance across defrost thermostat. Ohmmeter should read infinite resistance, indicating defrost thermostat has opened at approximately 65°F.
13. Shut off unit power and reconnect fan lead.
14. Remove jumper between DFT and R terminals. Reconnect defrost thermostat leads. Failure to remove jumper causes unit to switch to defrost every 30, 60, or 90 minutes and remain in defrost for full 10 minutes.
15. Replace access panel. Restore power to unit.

**If defrost thermostat does not check out following above items or incorrect calibration is suspected, check for defective thermostat as follows:**

1. Follow items 1-5 above.

2. Route sensor or probe using thermocouple temperature measuring device. Attach to liquid line near defrost thermostat. Insulate for more accurate reading.
3. Turn on power to outdoor unit.
4. Restart unit in heating.
5. Within a few minutes, liquid line temperature drops within a range causing defrost thermostat contacts to close. Temperature range is from 36°F (2.2ºC) to 29°F (-1.7ºC). Notice temperature at which ohmmeter reading goes from ∞ to zero ohms. Thermostat contacts close at this point.
6. Short between the speed-up terminals using a small slotted screwdriver.
7. Unit changes over to defrost within 21 sec (depending on timing cycle setting). Liquid line temperature rises to range where defrost thermostat contacts open. Temperature range is from 50°F (10ºC) to 70°F (21.1ºC). Resistance goes from zero to ∞ when contacts are open.
8. If either opening or closing temperature does not fall within above ranges or thermostat sticks in 1 position, replace thermostat to ensure proper defrost operation.

**NOTE:** With timing cycle set at 90 minutes, unit initiates defrost within approximately 21 sec. When you hear the reversing valve changing position, remove screwdriver immediately. Otherwise, control will terminate normal 10-minute defrost cycle in approximately 2 sec.

## Scroll Compressor

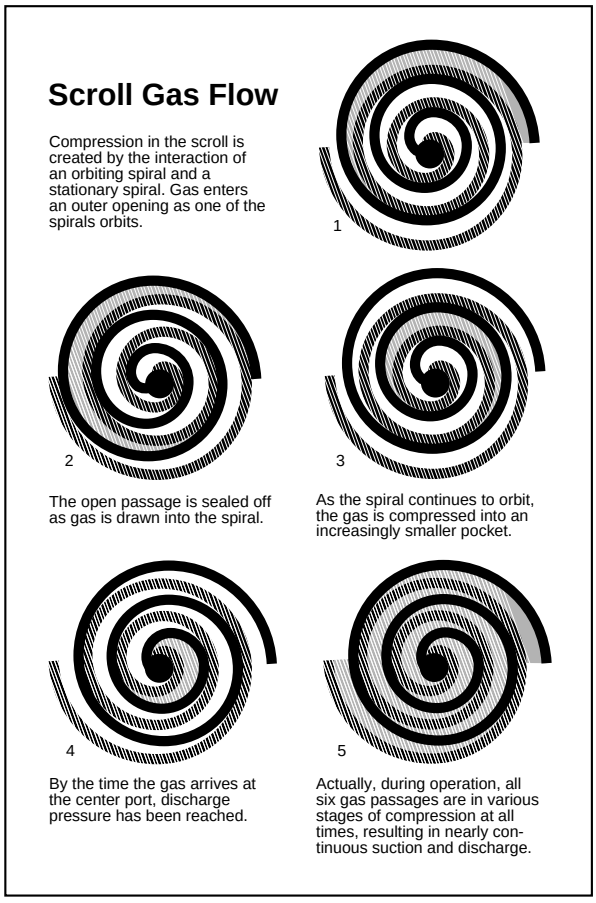


A90198

**Fig. 10 – Scroll Compressor Refrigerant Flow**

The compressors used in these products are specifically designed to operate with designated refrigerant and cannot be interchanged. The compressor is an electrical (as well as mechanical) device. Exercise extreme caution when working near compressors. Power should be shut off, if possible, for most troubleshooting techniques. Refrigerants present additional safety hazards.

**⚠ CAUTION**

**PERSONAL INJURY HAZARD**

Failure to follow this caution may result in personal injury.

Wear safety glasses, protective clothing, and gloves when handling refrigerant.

The scroll compressor pumps refrigerant through the system by the interaction of a stationary and an orbiting scroll. (See Fig. 10.) The scroll compressor has no dynamic suction or discharge valves, and it is more tolerant of stresses caused by debris, liquid slugging, and flooded starts. The compressor is equipped with an internal pressure relief port. The pressure relief port is a safety device, designed to protect against extreme high pressure. The relief port has an operating range between 550 to 625 psig differential pressure (Copeland). Scrolls have a variety of shut down solutions, depending on model, to prevent backward rotation and eliminate the need for cycle protection.

Some sizes may include a traditional reciprocating compressor. These compressors have standard pistons valves, overloads, and internal pressure relief

Some sizes may include a single cylinder rotary compressor. This compressor utilizes a rotor which is positioned eccentrically with respect to the shell. Refrigerant gas is ported directly into the compression chamber and discharged into the surrounding area. It is also known as a “high-side” design since high pressure gas surrounds the motor and compression chamber. The majority of the shell will be hot to the touch. The rotary compressor also utilizes an external built-in accumulator to reduce the likelihood of refrigerant liquid from entering the compressor.

### Compressor Failures

Compressor failures are classified in 2 broad failure categories; mechanical and electrical. Both types are discussed below.

#### Mechanical Failures

A compressor is a mechanical pump driven by an electric motor contained in a welded or hermetic shell. In a mechanical failure, motor or electrical circuit appears normal, but compressor does not function normally.

**⚠ WARNING**

**ELECTRICAL SHOCK HAZARD**

Failure to follow this warning could result in personal injury or death.

Do not supply power to unit with compressor terminal box cover removed.

**⚠ WARNING**

**ELECTRICAL SHOCK HAZARD**

Failure to follow this warning could result in personal injury or death.

Exercise extreme caution when reading compressor currents when high-voltage power is on. Correct any of the problems described below before installing and running a replacement compressor.

**Locked Rotor**

In this type of failure, compressor motor and all starting components are normal. When compressor attempts to start, it draws locked rotor current and cycles off on internal protection. Locked rotor current is measured by applying a clamp-on ammeter around common (blk) lead of compressor. Current drawn when it attempts to start is then measured. Locked rotor amp (LRA) value is stamped on compressor nameplate.

If compressor draws locked rotor amps and all other external sources of problems have been eliminated, compressor must be replaced. Because compressor is a sealed unit, it is impossible to determine exact mechanical failure. However, complete system should be checked for abnormalities such as incorrect refrigerant charge, restrictions, insufficient airflow across indoor or outdoor coil, etc., which could be contributing to the failure.

**Runs, Does Not Pump**

In this type of failure, compressor motor runs and turns compressor, but compressor does not pump refrigerant. A clamp-on ammeter on common leg shows a very low current draw, much lower than rated load amp (RLA) value stamped on compressor nameplate. Because no refrigerant is being pumped, there is no return gas to cool compressor motor. It eventually overheats and shuts off on its internal protection.

**Noisy Compressor**

Noise may be caused by a variety of internal and external factors. Careful attention to the "type" of noise may help identify the source. The following are some examples of abnormal conditions that may create objectionable noise:

1. A gurgling sound may indicate a liquid refrigerant floodback during operation. This could be confirmed if there is no compressor superheat. A compressor superheat of "0" degrees would indicate liquid refrigerant returning to the compressor. Most common reasons for floodback are: loss of evaporator blower, dirty coils, and improper airflow.
2. A rattling noise may indicate loose hardware. Inspect all unit hardware including the compressor grommets.
3. An internal "thunking", "thumping", "grinding" or "rattling" noise could indicate compressor internal failures and may be verified by comparing the compressor amperage to what the compressor should be drawing according to a manufacturer's performance data.
4. A whistling or squealing noise during operation may indicate a partial blockage of the refrigerant charge.
5. A whistle on shut down could indicate a partial leak path as refrigerant is equalizing from high to low side. On occasion, an in-line discharge check valve has prevented this sound.
6. If a compressor hums but won't start it could indicate either a voltage or amperage issue. Verify adequate voltage and operational start components if installed. If it is drawing excessive amperage and voltage doesn't appear to be the problem it may be assumed a locked condition. Ensure refrigerant has had ample time to equalize and boil out of the compressor before condemning.
7. When a heat pump switches into and out of defrost, a "swooshing" noise is expected due to the rapid pressure change within the system. Check that the defrost thermostat or thermistor is operating properly. Insulating the defrost sensing device may also help.

## Electrical Failures

The compressor mechanical pump is driven by an electric motor within its hermetic shell. In electrical failures, compressor does not run although external electrical and mechanical systems appear normal. Compressor must be checked electrically for abnormalities.

Before troubleshooting compressor motor, review this description of compressor motor terminal identification.

### Single-Phase Motors

To identify terminals C, S, and R:

1. Turn off all unit power.
2. Discharge run and start capacitors to prevent shock.
3. Remove all wires from motor terminals.
4. Read resistance between all pairs of terminals using an ohmmeter on 0-10 ohm scale.
5. Determine 2 terminals that provide greatest resistance reading.

Through elimination, remaining terminal must be common (C). Greatest resistance between common (C) and another terminal indicates the start winding because it has more turns. This terminal is the start (S). The remaining terminal will be run winding (R).

**NOTE:** If compressor is hot, allow time to cool and internal line break to reset. There is an internal line break protector which must be closed.

All compressors are equipped with internal motor protection. If motor becomes hot for any reason, protector opens. Compressor should always be allowed to cool and protector to close before troubleshooting. Always turn off all power to unit and disconnect leads at compressor terminals before taking readings.

Most common motor failures are due to either an open, grounded, or short circuit. When a compressor fails to start or run, 3 tests can help determine the problem. First, all possible external causes should be eliminated, such as overloads, improper voltage, pressure equalization, defective capacitor(s), relays, wiring, etc. Compressor has internal line break overload, so be certain it is closed.

### Open Circuit

**⚠ WARNING**

**UNIT PERSONAL INJURY HAZARD**

Failure to follow this warning could result in personal injury.

Use caution when working near compressor terminals. Damaged terminals have the potential to cause personal injury.

Never put face or body directly in line with terminals.

To determine if any winding has a break in the internal wires and current is unable to pass through, follow these steps:

1. Be sure all power is off.
2. Discharge all capacitors.
3. Remove wires from terminals C, S, and R.
4. Check resistance from C-R, C-S, and R-S using an ohmmeter on 0-1000 ohm scale.

Because winding resistances are usually less than 10 ohms, each reading appears to be approximately 0 ohm. If resistance remains at 1000 ohms, an open or break exists and compressor should be replaced.

**⚠ CAUTION**

**UNIT DAMAGE HAZARD**

Failure to follow this caution may result in equipment damage or improper operation.

Be sure internal line break overload is not temporarily open.

## System Clean-Up After Burnout

Turn off all power to unit before proceeding. Wear safety glasses and gloves when handling refrigerants. Acids formed as a result of motor burnout can cause burns.

**NOTE:** To analyze level of suspected contamination from compressor burnout, use Total Test. See your distributor/branch.

Some compressor electrical failures can cause motor to overheat. When this occurs, byproducts, which include sludge, carbon, and acids, contaminate system. If burnout is severe enough, system must be cleaned before replacement compressor is installed. The 2 types of motor burnout are classified as mild or severe.

In mild burnout, there is little or no detectable odor. Compressor oil is clear or slightly discolored. An acid test of compressor oil will be negative. This type of failure is treated the same as mechanical failure. Liquid line strainer should be removed and liquid line filter drier installed.

In a severe burnout, there is a strong, pungent, rotten egg odor. Compressor oil is very dark. Evidence of burning may be present in tubing connected to compressor. An acid test of compressor oil will be positive. Complete system must be reverse flushed with refrigerant. Metering device must be cleaned or replaced. In a heat pump, accumulator and reversing valve are replaced. These components are also removed and bypassed during reverse flushing procedure. Remove and discard liquid line strainer. After system is reassembled, install liquid and suction line filter driers. Run system for 2 hrs. Discard both driers and install new liquid line drier only.

## Compressor Removal and Replacement

Once it is determined that compressor has failed and the reason established, compressor must be replaced.

**⚠ CAUTION**

**PERSONAL INJURY HAZARD**

Failure to follow this caution may result in personal injury. Wear safety glasses, protective clothing, and gloves when handling refrigerant and observe the following:

The high flow service valve is equipped with Schrader valves.

**⚠ WARNING**

**PERSONAL INJURY AND ENVIRONMENTAL HAZARD**

Failure to follow this warning could result in personal injury or death.

Relieve pressure and recover all refrigerant before system repair or final unit disposal. Use all service ports and open all flow-control devices, including solenoid valves. Federal regulations require that you do not vent refrigerant to the atmosphere. Recover during system repair or final unit disposal.

1. Shut off all power to unit.
2. Remove and recover all refrigerant from system until pressure gages read zero psig. Use all service ports.
3. Disconnect electrical plug from compressor. Disconnect or remove crankcase heater (if equipped) and remove compressor holddown nuts and washers.
4. Cut compressor from system with tubing cutters. Do not use brazing torch for compressor removal. Oil vapor may ignite when compressor is disconnected.
5. Scratch matching marks on stubs in old compressor. Make corresponding marks on replacement compressor.
6. Use torch to remove stubs from old compressor and to reinstall them in replacement compressor.
7. Use copper couplings to tie compressor back into system.
8. Evacuate system, recharge, and check for normal system operation.
9. Compressors have copper plated steel suction ports. Excess heat during brazing will burn off copper plating. See Brazing section for additional information.

## Outdoor Fan Adjustment

**⚠ CAUTION**

**UNIT OPERATION HAZARD**

Failure to follow this caution may result in damage to unit components.

Keep the condenser fan free from all obstructions to ensure proper cooling operation. Never place articles on top of unit.

1. Shut off unit power supply and install lockout tag.
2. Remove outdoor-fan assembly (grille, motor, motor cover, and fan) by removing screws and flipping assembly onto unit top cover.
3. Inspect the fan blades for cracks or bends.
4. If fan needs to be removed, loosen the setscrew and slide the fan off the motor shaft.
5. When replacing fan blade, position blade as shown in Fig. 11. Tighten setscrews.

## Fan Motor

The fan motor rotates the fan blade that draws air through the outdoor coil to exchange heat between the refrigerant and the air. Motors are totally enclosed to increase reliability. This eliminates the need for a rain shield. For the correct position of fan blade assembly, the fan hub should be flush with the motor shaft. Replacement motors and blades may vary slightly.

**⚠ WARNING**

**ELECTRICAL SHOCK HAZARD**

Failure to follow this warning could result in personal injury or death.

Turn off all power before servicing or replacing fan motor. Be sure unit main power switch is turned off. Lock out and tag with suitable warning label.

The bearings are permanently lubricated, therefore, no oil ports are provided.

For suspected electrical failures, check for loose or faulty electrical connections, or defective fan motor capacitor. Fan motor is equipped with thermal overload device in motor windings which may open under adverse operating conditions. Allow time for motor to cool so device can reset. Further checking of motor can be done with an ohmmeter. Set scale on R X 1 position, and check for continuity between 3 leads. Replace motors that show an open circuit in any of the windings. Place 1 lead of ohmmeter on each motor lead. At same time, place other ohmmeter lead on motor case (ground). Replace any motor that shows resistance to ground, arcing, burning, or overheating.

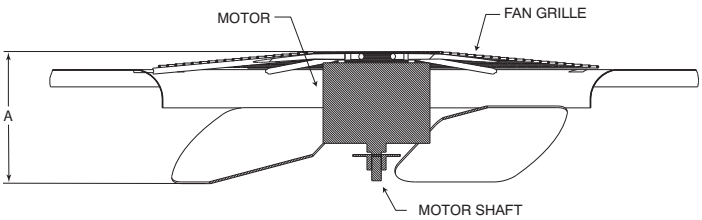


**14 SEER Heat Pump and Hybrid Heat Dual Fuel**

| Size | "A" | |
|---|---|---|
| | In. | mm |
| 24 | 9.0 | 228 |
| 30 | 7.1 | 180 |
| 36 | 7.6 | 193 |
| 42 | 7.6 | 193 |
| 48 | 7.6 | 193 |
| 60 | 7.6 | 193 |

**14 SEER A/C & Gas Heat/Electric Cool**

| Size | "A" | |
|---|---|---|
| | In. | mm |
| 24 | 9.0 | 228 |
| 30 | 7.1 | 180 |
| 36 | 8.0 | 203 |
| 42 | 7.6 | 193 |
| 48 | 7.6 | 193 |
| 60 | 7.6 | 193 |

**15 SEER A/C, Gas Heat, Heat Pump, and Dual Fuel Carrier, Bryant Series A, B & E, ICP Series A & G**

| Size | "A" | |
|---|---|---|
| | In. | mm |
| 24 (A/C and Gas Heat models only) | 6.3 | 160 |
| 30 (A/C and Gas Heat models only) | 6.3 | 160 |
| 36 | 7.6 | 193 |
| 42 | 7.6 | 193 |
| 48 | 7.6 | 193 |
| 60 | 7.6 | 193 |

**15 SEER Carrier, Bryant Heat Pump & Hybrid Heat Dual Fuel Series C & E, ICP Heat Pump Series B & G**

| Size | "A" | |
|---|---|---|
| | IN. | mm |
| 24 | 9.5 | 241 |
| 30 | 10.0 | 254 |

**Fig. 11 – Outdoor Fan Adjustment**

## Compressor Plug

The scroll compressor electrical plug provides a quick-tight connection to compressor terminals. The plug completely covers the compressor terminals and the mating female terminals are completely encapsulated in plug. Therefore, terminals are isolated from any moisture so corrosion and resultant pitted or discolored terminals are reduced. The plug is oriented to relief slot in terminal box so cover cannot be secured if wires are not positioned in slot, assuring correct electrical connection at the compressor. The plug can be removed by simultaneously pulling while "rocking" plug. However, these plugs can be used only on specific compressors. The configuration around the fusite terminals is outlined on the terminal covers. The slot through which wires of plug are routed is oriented on the bottom and slightly to the left. The correct plug can be connected easily to compressor terminals and plug wires can easily be routed through slot terminal cover.

It is strongly recommended to replace the compressor plug should a compressor fail due to a suspected electrical failure. At a minimum, inspect plug for proper connection and good condition on any compressor replacement.

The rotary compressor electrical plus is same as scroll compressor electrical plug except it need gasket for better sealing and nut to secure the plug on the compressor.

The reciprocating compressor electrical plug is same as the scroll compressor electrical plug except plug is inside the terminal block.

## Low-Voltage Terminals

The low-voltage terminal designations, and their description and function, are used on all Small Packaged Products (SPP) condensers.

W—Energizes first-stage supplemental heat.

R—Energizes 24-v power from transformer.

Y—Energizes contactor for first-stage cooling or first-stage heating for heat pumps.

O—Energizes reversing valve on heat pumps.

C—Common side of transformer.

G—Indoor Fan

### Ground Circuit

To determine if a wire has broken or come in direct contact with shell, causing a direct short to ground, follow these steps:

1. Recover all refrigerant charge.
2. Using an ohmmeter on R X 10,000 ohm scale or megohmmeter (follow manufacturer's instructions).
3. Be sure all power is off.
4. Discharge all capacitors.
5. Remove compressor plug.
6. Place one meter probe on ground or on compressor shell. Make a good metal-to-metal contact. Place other probe on terminals C, S, and R in sequence.
7. Note meter scale.
8. If reading of 0 or low resistance is obtained, motor is grounded. Replace compressor.

Compressor resistance to ground should not be less than 1000 ohms per volt of operating voltage.

Example:

230 volts X 1000 ohms/volt = 230,000 ohms minimum.

### Short Circuit

To determine if any wires within windings have broken through their insulation and made contact with other wires, thereby shorting all or part of the winding(s), be sure the following conditions are met.

1. Correct motor winding resistances must be known before testing, either from previous readings or from manufacturer's specifications.
2. Temperature of windings must be as specified, usually about 70°F (21ºC).
3. Resistance measuring instrument must have an accuracy within ± 5-10 percent. This requires an accurate ohmmeter such as a Wheatstone bridge or null balance-type instrument.
4. Motor must be dry or free from direct contact with liquid refrigerant.

**Make This Critical Test**

(Not advisable unless above conditions are met)

1. Be sure all power is off.
2. Recover all refrigerant charge.

3. Discharge all capacitors.
4. Remove wires from terminals C, S, and R.
5. Place instrument probes together and determine probe and lead wire resistance.
6. Check resistance readings from C-R, C-S, and R-S.
7. Subtract instrument probe and lead resistance from each reading.

If any reading is within ±20 percent of known resistance, motor is probably normal. Usually a considerable difference in reading is noted if a turn-to-turn short is present.

## Refrigeration System

### Refrigerant

**⚠ WARNING**

**UNIT OPERATION AND SAFETY HAZARD**

Failure to follow this warning could result in personal injury or equipment damage.

R-410A refrigerant which has higher pressures than R-22 and other refrigerants. No other refrigerant may be used in this system. Gauge set, hoses, and recovery system must be designed to handle R-410A. If you are unsure consult the equipment manufacturer.

In an air conditioning and heat pump system, refrigerant transfers heat from one replace to another. The condenser is the outdoor coil in the cooling mode and the evaporator is the indoor coil.

In a heat pump, the condenser is the indoor coil in the heating mode and the evaporator is the outdoor coil.

In the typical air conditioning mode, compressed hot gas leaves the compressor and enters the condensing coil. As gas passes through the condenser coil, it rejects heat and condenses into liquid. The liquid leaves condensing unit through liquid line and enters metering device at evaporator coil. As it passes through metering device, it becomes a gas-liquid mixture. As it passes through indoor coil, it absorbs heat and the refrigerant moves to the compressor and is again compressed to hot gas, and cycle repeats.

### Compressor Oil

**⚠ CAUTION**

**UNIT DAMAGE HAZARD**

Failure to follow this caution may result in equipment damage or improper operation.

The compressor in a R-410A system uses a polyolester (POE) or polyvinyl ether (PVE) oil. This oil is extremely hygroscopic, meaning it absorbs water readily. POE/PVE oils can absorb 15 times as much water as other oils designed for HCFC and CFC refrigerants. Take all necessary precautions to avoid exposure of the oil to the atmosphere. (See Table 3.)

**Table 3 – Compressor Information**

**14 SEER Air Conditioner**

| Unit Size | 24 | 30 | 30 | 30 | 36 | 42 | 48 | 60 |
|---|---|---|---|---|---|---|---|---|
| Type | AC | AC | AC | AC | AC | AC | AC | AC |
| Chassis Size | Small | Small | Small | Small | Small | Large | Large | Large |
| Compressor | Rotary | Recip | Rotary | Scroll | | | | |
| Manufacturer Oil Type | PVE | Hatcol 32BCE Polyolester (POE) | PVE | 3MAF Polyolester Oil (POE) | | | | |
| Oil Charge - fl.oz. (intial/recharge) | 27/24 | 30 / 27 | 30.4/27 | 25/21 | .80 | 42/36 | 42/36 | 42/36 |
| Winding Resistance -ohm (Start C-R) | 5.01 | 0.98 | 1.23 | .89 | 0.89 | 0.61 | 0.50 | 0.42 |
| Winding Resistance -ohm (Start C-S) | 3.51 | 1.73 | 1.14 | 1.02 | 1.66 | 1.63 | 0.81 | 0.93 |
| Winding Resistance -ohm (Start R-S) | 8.52 | 2.71 | 2.37 | 191 | 2.55 | 2.23 | 1.31 | 1.35 |
| Run Capacitor (mfd / volts) | 40 / 440 | 40 / 440 | 55/440 | 35/370 | 45 / 440 | 45 / 440 | 70 / 440 | 70 / 440 |

**15 SEER Air Conditioner**

| Unit Size | 24 | 30 | 36 | 42 | 48 | 60 |
|---|---|---|---|---|---|---|
| Type | AC | AC | AC | AC | AC | AC |
| Chassis Size | Small | Small | Large | Large | Large | Large |
| Compressor | Scroll | | | | | |
| Manufacturer Oil Type | 3MAF Polyolester Oil (POE) | | | | | |
| Oil Charge - fl.oz. (intial/recharge) | 25/21 | 25/21 | 40/370 | 42/38 | 42/38 | 42/38 |
| Winding Resistance -ohm (Start C-R) | 1.30 | 1.02 | 0.85 | 0.62 | 0.53 | 0.42 |
| Winding Resistance -ohm (Start C-S) | 1.64 | 1.91 | 1.50 | 1.55 | 1.9 | 1.67 |
| Winding Resistance -ohm (Start R-S) | 2.94 | 2.93 | 2.35 | 2.17 | 2.44 | 2.09 |
| Run Capacitor (mfd / volts) | 35 / 370 | 40/370 | 40/370 | 45 / 370 | 30/370 | 40/370 |

**14 SEER Heat Pump**

| Unit Size | 24 | 30 | 36 | 42 | 48 | 60 |
|---|---|---|---|---|---|---|
| Type | HP | HP | HP | HP | HP | HP |
| Chassis Size | Small | Small | Large | Large | Large | Large |
| Compressor | Scroll | | | | | |
| Manufacturer Oil Type | 3MAF Polyolester Oil (POE) | | | | | |
| Oil Charge - fl.oz. (intial/recharge) | 25/19 | 25/21 | 25/19 | 43/38 | 42/36 | 42/36 |
| Winding Resistance -ohm (Start C-R) | 1.30 | 1.02 | 0.89 | 0.56 | 0.50 | 0.41 |
| Winding Resistance -ohm (Start C-S) | 1.64 | 1.91 | 1.66 | 1.31 | 0.81 | 0.76 |
| Winding Resistance -ohm (Start R-S) | 2.94 | 2.93 | 2.55 | 1.86 | 1.31 | 1.16 |
| Run Capacitor (mfd / volts) | 35 / 440 | 40/440 | 45 / 440 | 45 / 440 | 70 / 440 | 70 / 440 |

**15 SEER Heat Pump**

| Unit Size | 24 | 30 | 36 | 42 | 48 | 60 |
|---|---|---|---|---|---|---|
| Type | HP | HP | HP | HP | HP | HP |
| Chassis Size | Small | Small | Large | Large | Large | Large |
| Compressor | Scroll | | | | | |
| Manufacturer Oil Type | 3MAF Polyolester Oil (POE) | | | | | |
| Oil Charge - fl.oz. (intial/recharge) | 25/21 | 25/21 | 40/370 | 42/38 | 42/38 | 42/38 |
| Winding Resistance -ohm (Start C-R) | 1.30 | 1.02 | 0.85 | 0.62 | 0.53 | 0.42 |
| Winding Resistance -ohm (Start C-S) | 1.64 | 1.91 | 1.50 | 1.55 | 1.90 | 1.67 |
| Winding Resistance -ohm (Start R-S) | 2.94 | 2.93 | 2.35 | 2.17 | 2.44 | 2.09 |
| Run Capacitor (mfd / volts) | 35 / 370 | 40/370 | 40/370 | 45 / 370 | 30/370 | 40/370 |

## Brazing

This section on brazing is not intended to teach a technician how to braze. There are books and classes which teach and refine brazing techniques. The basic points below are listed only as a reminder.

Definition: The joining and sealing of metals using a nonferrous metal having a melting point over 800°F/426.6°C.

Flux: A cleaning solution applied to tubing or wire before it is brazed. Flux improves the strength of the brazed connection.

When brazing is required in the refrigeration system, certain basics should be remembered. The following are a few of the basic rules.

1. Clean joints make the best joints. To clean:
   – Remove all oxidation from surfaces to a shiny finish before brazing.
   – Remove all flux residue with brush and water while material is still hot.
2. Silver brazing alloy is used on copper-to-brass, copper-to-steel, or copper-to-copper. Flux is required when using silver brazing alloy. Do not use low temperature solder.
3. Fluxes should be used carefully. Avoid excessive application and do not allow fluxes to enter into the system.
4. Brazing temperature of copper is proper when it is heated to a minimum temperature of 800°F (426.6°C) and it is a dull red color in appearance.

## Reversing Valve

In heat pumps, changeover between heating and cooling modes is accomplished with a valve that reverses flow of refrigerant in system. This reversing valve device is easy to troubleshoot and replace. The reversing valve solenoid can be checked with power off with an ohmmeter. Check for continuity and shorting to ground. With control circuit (24v) power on, check for correct voltage at solenoid coil. Check for overheated solenoid.

With unit operating, other items can be checked, such as frost or condensate water on refrigerant tubes.

The sound made by a reversing valve as it begins or ends defrost is a “whooshing” sound, as the valve reverses and pressures in system equalize. An experienced service technician detects this sound and uses it as a valuable troubleshooting tool.

Using a remote measuring device, check inlet and outlet line temperatures. DO NOT touch lines. If reversing valve is operating normally, inlet and outlet temperatures on appropriate lines should be close to each other. Any difference would be due to heat loss or gain across valve body. Temperatures are best checked with a remote reading electronic-type thermometer with multiple probes. Route thermocouple leads to inside of coil area through service valve mounting plate area underneath coil. Fig. 12 and Fig. 13 show test points (TP) on reversing valve for recording temperatures. Insulate points for more accurate reading.

If valve is defective:

1. Shut off all power to unit and remove charge from system.
2. Remove solenoid coil from valve body. Remove valve by cutting it from system with tubing cutter. Repair person should cut in such a way that stubs can be easily re-brazed back into system. Do not use hacksaw. This introduces chips into system that cause failure. After defective valve is removed, wrap it in wet rag and carefully unbraze stubs. Save stubs for future use. Because defective valve is not overheated, it can be analyzed for cause of failure when it is returned.
3. Braze new valve onto used stubs. Keep stubs oriented correctly. Scratch corresponding matching marks on old valve and stubs and on new valve body to aid in lining up new valve properly. When brazing stubs into valve, protect valve body with wet rag to prevent overheating.
4. Use slip couplings to install new valve with stubs back into system. Even if stubs are long, wrap valve with a wet rag to prevent overheating.
5. After valve is brazed in, check for leaks. Evacuate and charge system. Operate system in both modes several times to be sure valve functions properly.

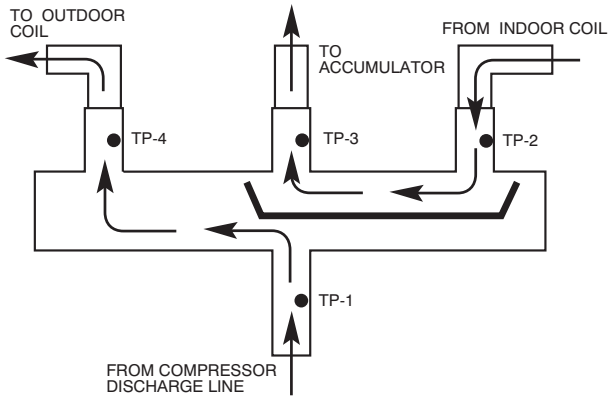


A10189

**Fig. 12 – Reversing Valve (Cooling Mode or Defrost Mode, Solenoid Energized)**

## Liquid Line Filter Drier

Filter driers are specifically designed for R-410A refrigerant. Only operate with the appropriate drier using factory authorized components.

There is a liquid line drier located inside the unit in the compressor section. The liquid line drier also acts as a strainer.

## Suction Line Filter Drier

The suction line drier is specifically designed to operate with R-410A, use only factory authorized components. Suction line filter drier is used in cases where acid might occur, such as burnout. Heat pump units must have the drier installed between the compressor and accumulator only. Remove after 10 hours of operation. Never leave suction line filter drier in a system longer than 72 hours (actual time).

## Accumulator

The accumulator is specifically designed to operate with R-410A pressures; use only factory-authorized components. Under some light load conditions on indoor coils, liquid refrigerant is present in suction gas returning to compressor. The accumulator stores liquid and allows it to boil off into a vapor so it can be safely returned to compressor. Since a compressor is designed to pump refrigerant in its gaseous state, introduction of liquid into it could cause severe damage or total failure of compressor.

The accumulator is a passive device which seldom needs replacing. Occasionally its internal oil return orifice or bleed hole may become plugged. Some oil is contained in refrigerant returning to compressor. It cannot boil off in accumulator with liquid refrigerant. The bleed hole allows a small amount of oil and refrigerant to enter the return line where velocity of refrigerant returns it to compressor. If bleed hole plugs, oil is trapped in accumulator, and compressor will eventually fail from lack of lubrication. If bleed hole is plugged, accumulator must be changed. The accumulator has a fusible element located in the bottom end bell. (See Fig. 14.) This fusible element will melt at 430°F/221°C and vent the refrigerant if this temperature is reached either internal or external to the system. If fuse melts, the accumulator must be replaced.

To change accumulator:

1. Shut off all power to unit.
2. Recover all refrigerant from system.
3. Break vacuum with dry nitrogen. Do not exceed 5 psig.

**NOTE:** Refer to appropriate sections of Service Manual for instructions.

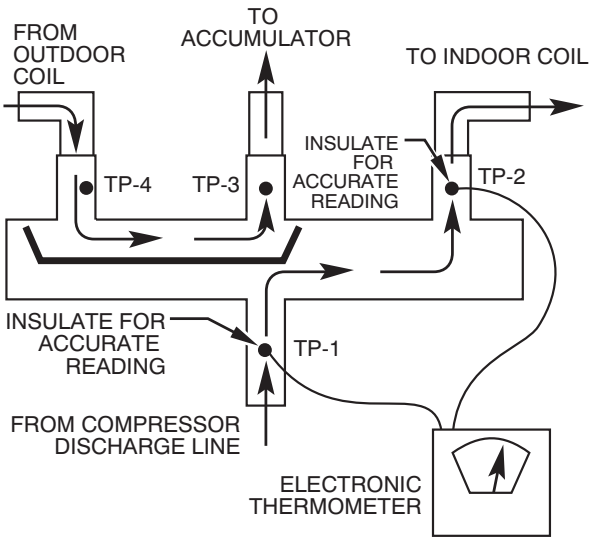


A10188

**Fig. 13 – Reversing Valve (Heating Mode, Solenoid De-Energized)**

**⚠ CAUTION**

**PERSONAL INJURY HAZARD**

Failure to follow this caution may result in personal injury.

Wear safety glasses, protective clothing, and gloves when handling refrigerant.

4. Remove accumulator from system with tubing cutter.
5. Tape ends of open tubing.
6. Scratch matching marks on tubing studs and old accumulator. Scratch matching marks on new accumulator. Unbraze stubs from old accumulator and braze into new accumulator.
7. Thoroughly rinse any flux residue from joints and paint with corrosion-resistant coating such as zinc-rich paint.
8. Install factory authorized accumulator into system with copper slip couplings.
9. Evacuate and charge system.

Pour and measure oil quantity (if any) from old accumulator. If more than 20 percent of oil charge is trapped in accumulator, add new POE or PVE oil to compressor to make up for this loss. (See Table 3.)

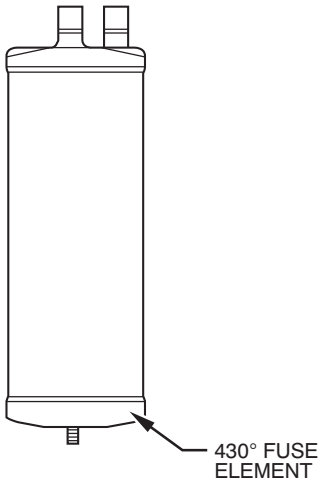


A88410

**Fig. 14 – Accumulator**

## Thermostatic Expansion Valve (TXV)

Selected air conditioning and heat pump units have a factory installed thermostatic expansion valve (TXV). The TXV will be a bi-flow, hard-shutoff with an external equalizer and a balance port pin. A hard shut-off TXV does not have a bleed port. Therefore, minimal equalization takes place after shutdown. TXVs are specifically designed to operate with R-410A refrigerant, use only factory authorized TXV's. Do not interchange R-410A and R-22 TXVs.

## TXV Operation

The TXV is a metering device that is used in air conditioning and heat pump systems to adjust to changing load conditions by maintaining a preset superheat temperature at the outlet of the evaporator coil. The volume of refrigerant metered through the valve seat is dependent upon the following:

1. Superheat temperature is sensed by cap tube sensing bulb on suction tube at outlet of evaporator coil. This temperature is converted into pressure by refrigerant in the bulb pushing downward on the diaphragm which opens the valve via the pushrods.
2. The suction pressure at the outlet of the evaporator coil is transferred via the external equalizer tube to the underside of the diaphragm. This is needed to account for the indoor coil pressure drop. Coils typically have a high pressure drop, which requires this valve feature.
3. The pin is spring loaded, which exerts pressure on the underside of the diaphragm. Therefore, the bulb pressure works against the spring pressure and evaporator suction pressure to open the valve.
   If the load increases, the temperature increases at the bulb, which increases the pressure on the top side of the diaphragm. This opens the valve and increases the flow of refrigerant. The increased refrigerant flow causes the leaving evaporator temperature to decrease. This lowers the pressure on the diaphragm and closes the pin. The refrigerant flow is effectively stabilized to the load demand with negligible change in superheat.

**Table 4 – Piston/TXV Table**

**Air Conditioner**

| Unit Size (ton) | Indoor Cooling Piston/TXV Number |
|---|---|
| 14 SEER | |
| 24 | 59 |
| 30 (Carrier & Bryant series C and ICP series E) | 61 |
| 30 (Carrier and Bryant series D and E and ICP series F and G) | 63 |
| 36 | TXV |
| 42 | 73 |
| 48 | 80 |
| 60 | 84 |
| 15 SEER | |
| 24 | TXV |
| 30 | TXV |
| 36 | TXV |
| 42 | TXV |
| 48 | TXV |
| 60 | TXV |

**Heat Pump**

| Unit Size (Ton) | Indoor Cooling Piston/TXV Number | Outdoor Heating Piston Number (2 Qty) |
|---|---|---|
| 14 SEER | | |
| 24 | TXV | 32 |
| 30 | TXV | 35 |
| 36 | TXV | 40 |
| 42 | TXV | 46 |
| 48 | 80 | 46 |
| 60 | TXV | 52 |
| **15 SEER Carrier, Bryant Series A, B & E, ICP Series A & G** | | |
| 24 (Carrier & Bryant A & B Series only, ICP A Series only) | TXV | 32 |
| 30 (Carrier & Bryant A & B Series only, ICP A Series only) | TXV | 40 |
| 36 | TXV | 42 |
| 42 | TXV | 42 |
| 48 | TXV | 42 |
| 60 | TXV | 52 |
| **15 SEER Carrier, Bryant Heat Pump & Hybrid Heat Dual Fuel Series C & E, ICP Heat Pump Series B & G** | | |
| 24 | TXV | 32 |
| 30 | TXV | 35 (1) & 38 (1) |

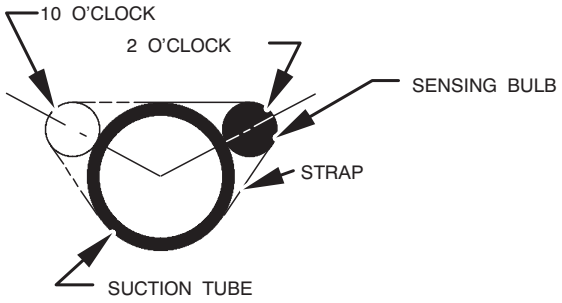


A08083

**Fig. 15 – Position of Sensing Bulb**

## Piston Body Cleaning or Replacement

**WARNING**

**PERSONAL INJURY AND ENVIRONMENTAL HAZARD**

Failure to relieve system pressure could result in personal injury and/or death.

1. Relieve pressure and recover all refrigerant before servicing existing equipment, and before final unit disposal. Use all service ports.
2. Federal regulations require that you do not vent refrigerant into the atmosphere. Recover during system repair or final unit disposal.

**CAUTION**

**UNIT DAMAGE HAZARD**

Failure to follow this caution may result in equipment damage.

Damage may occur to the scroll compressor if operated at a negative suction pressure during a system pumpdown.

1. Recover refrigerant from tubing and coil through high flow service port on suction and discharge lines. Disconnect refrigerant (liquid) tube from distributor body. (See Fig. 16.)
2. Avoid damaging seal ring or machined surfaces on piston, bore, and retainer.
3. Using small wire with a hook on end of it, remove piston from body.

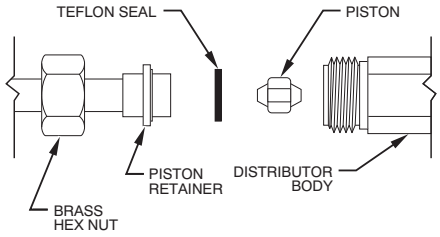


A10176

**Fig. 16 – Refrigerant Flow-Control Device**

**CAUTION**

**UNIT DAMAGE HAZARD**

Failure to follow this caution may result in equipment damage.

When cleaning the piston orifice, be careful not to scratch or enlarge the opening, as this will affect operation.

4. Install new or cleaned piston into body.
5. Replace seal ring on retainer.
6. Reconnect refrigerant tube to piston body.
7. Pressurize tubing and coil, then leak check.
8. Evacuate tubing and coil as necessary.

**CAUTION**

**UNIT DAMAGE HAZARD**

Failure to follow this caution may result in equipment damage.

Use a backup wrench and do not over tighten, as deformation of the piston body will occur, causing the piston to lodge in a partially open or closed position.

## Liquid Tube Strainer/Filter

The TXV and refrigerant flow-control device is protected by either a wire mesh strainer or filter drier.

# Refrigeration System Repair

**WARNING**

**EXPLOSION HAZARD**

Failure to follow this warning could result in death, serious personal injury, and/or property damage.

Never use air or gases containing oxygen for leak testing or operating refrigerant compressors. Pressurized mixtures of air or gases containing oxygen can lead to an explosion.

## Leak Detection

New installations should be checked for leaks prior to complete charging. If a system has lost all or most of its charge, system must be pressurized again to approximately 150 psig minimum and 375 psig maximum. This can be done by adding refrigerant using normal charging procedures or by pressurizing system with nitrogen (less expensive than refrigerant). Nitrogen also leaks faster than refrigerants. Nitrogen cannot, however, be detected by an electronic leak detector. (See Fig. 17.)

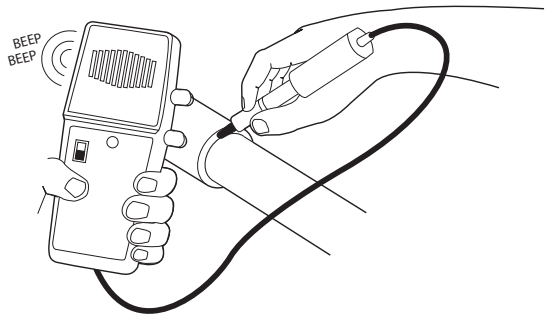


A95422

**Fig. 17 – Electronic Leak Detection**

**WARNING**

**PERSONAL INJURY AND UNIT DAMAGE HAZARD**

Failure to follow this warning could result in personal injury or death.

Due to the high pressure of nitrogen, it should never be used without a pressure regulator on the tank.

Assuming that a system is pressurized with either all refrigerant or a mixture of nitrogen and refrigerant, leaks in the system can be found with an electronic leak detector that is capable of detecting specific refrigerants.

If system has been operating for some time, first check for a leak visually. Since refrigerant carries a small quantity of oil, traces of oil at any joint or connection is an indication that refrigerant is leaking at that point.

A simple and inexpensive method of testing for leaks is to use soap bubbles. (See Fig. 18.) Any solution of water and soap may be used. Soap solution is applied to all joints and connections in system. A small pinhole leak is located by tracing bubbles in soap solution around leak. If the leak is very small, several minutes may pass before a bubble will form. Popular commercial leak detection solutions give better, longer-lasting bubbles and more accurate results than plain soapy water. The bubble solution must be removed from the tubing and fittings after checking for leaks as some solutions may corrode the metal.

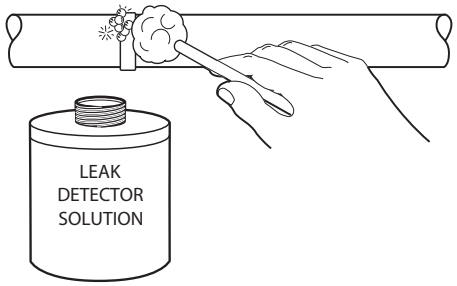


A95423

**Fig. 18 – Bubble Leak Detection**

You may use an electronic leak detector designed for specific refrigerant to check for leaks. (See Fig. 17.) This unquestionably is the most efficient and easiest method for checking leaks. There are various types of electronic leak detectors. Check with manufacturer of equipment for suitability. Generally speaking, they are portable, lightweight, and consist of a box with several switches and a probe or sniffer. Detector is turned on and probe is passed around all fittings and connections in system. Leak is detected by either the movement of a pointer on detector dial, a buzzing sound, or a light.

In all instances when a leak is found, system charge must be recovered and leak repaired before final charging and operation. After leak testing or leak is repaired, replace liquid line filter drier, evacuate system, and recharge with correct refrigerant quantity.

## Coil Removal

Coils are easy to remove if required for compressor removal, or to replace coil.

1. Shut off all power to unit.
2. Recover refrigerant from system through high flow service valves.
3. Break vacuum with nitrogen.
4. Remove top cover. (See Access Compressor or other internal cabinet component)
5. Remove screws in coil panels.

**⚠ WARNING**

**FIRE HAZARD**

Failure to follow this warning could result in personal injury or equipment damage.

Cut tubing to reduce possibility of personal injury and fire.

6. Use midget tubing cutter to cut liquid and vapor lines at both sides of coil. Cut in convenient location for easy reassembly with copper slip couplings.
7. Lift coil vertically from basepan and carefully place aside.
8. Reverse procedure to reinstall coil.
9. Replace filter drier, evacuate system, recharge, and check for normal systems operation.

## Compressor Removal and Replacement

Once it is determined that compressor has failed and the reason established, compressor must be replaced.

**⚠ CAUTION**

**PERSONAL INJURY HAZARD**

Failure to follow this caution may result in personal injury.

Turn off all power to unit before proceeding. Lock out and tag switch with suitable warning label. Wear safety glasses, protective clothing, and gloves when handling refrigerant. Acids formed as a result of motor burnout can cause burns.

**⚠ CAUTION**

**PERSONAL INJURY HAZARD**

Failure to follow this caution may result in personal injury.

Wear safety glasses, protective clothing, and gloves when handling refrigerant and when using brazing torch.

1. Shut off all power to unit.
2. Remove and recover all refrigerant from system until pressure gauges read 0 psig. Use all service ports. Never open a system under a vacuum to atmosphere. Break vacuum with dry nitrogen holding charge first. Do not exceed 5 psig.
3. Disconnect electrical leads from compressor. Disconnect or remove crankcase heater and remove compressor hold-down bolts.
4. Cut compressor from system with tubing cutter. Do not use brazing torch for compressor removal. Oil vapor may ignite when compressor is disconnected.
5. Scratch matching marks on stubs in old compressor. Make corresponding marks on replacement compressor.
6. Use torch to remove stubs from old compressor and to reinstall them in replacement compressor.
7. Use copper couplings to tie compressor back into system.
8. Replace filter drier, evacuate system, recharge, and check for normal system operation.

**⚠ CAUTION**

**UNIT DAMAGE HAZARD**

Failure to follow this caution may result in equipment damage or improper operation.

Do not leave system open to atmosphere. Compressor oil is highly susceptible to moisture absorption.

## System Clean-Up After Burnout

Some compressor electrical failures can cause motor to burn. When this occurs, by-products of burn, which include sludge, carbon, and acids, contaminate system. Test the oil for acidity using POE oil acid test to determine burnout severity. If burnout is severe enough, system must be cleaned before replacement compressor is installed. The 2 types of motor burnout are classified as mild or severe.

In mild burnout, there is little or no detectable odor. Compressor oil is clear or slightly discolored. An acid test of compressor oil will be negative. This type of failure is treated the same as mechanical failure. Liquid-line strainer should be removed and liquid-line filter drier replaced.

In a severe burnout, there is a strong, pungent, rotten egg odor. Compressor oil is very dark. Evidence of burning may be present in tubing connected to compressor. An acid test of compressor oil will be positive. Follow these additional steps:

1. TXV must be replaced.
2. Drain any trapped oil from accumulator if used.
3. Remove and discard liquid-line strainer and filter drier.
4. After system is reassembled, install liquid and suction-line R-410A filter driers.

**NOTE:** On heat pumps, install suction line drier between compressor and accumulator.

5. Operate system for 10 hr. Monitor pressure drop across drier. If pressure drop exceeds 3 psig replace suction-line and liquid-line filter driers. Be sure to purge system with dry nitrogen when replacing filter driers. If suction line driers must be replaced, retest

pressure drop after additional 10 hours (run time). Continue to monitor pressure drop across suction line filter drier. After 10 hr of run time, remove suction-line filter drier and replace liquid-line filter drier. Never leave suction-line filter drier in system longer than 72 hr (actual time).

6. Charge system. (See unit information plate.)

**⚠ CAUTION**

**UNIT DAMAGE HAZARD**

Failure to follow this caution may result in equipment damage or improper operation.

Only suction line filter driers should be used for refrigerant and oil clean up. Use of non-approved products could limit system life and void unit warranty.

## Evacuation

Proper evacuation of the system will remove non-condensibles and assure a tight, dry system before charging. The 2 methods used to evacuate a system are the deep vacuum method and the triple evacuation method.

### Deep Vacuum Method

The deep vacuum method requires a vacuum pump capable of pulling a vacuum of 500 microns and a vacuum gauge capable of accurately measuring this vacuum depth. The deep vacuum method is the most positive way of assuring a system is free of air and moisture. (See Fig. 19.)

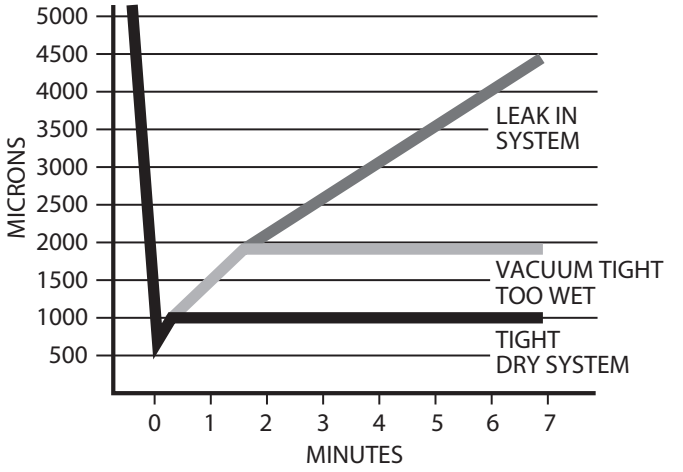


A95424

**Fig. 19 – Deep Vacuum Graph**

### Triple Evacuation Method

The triple evacuation method should be used when vacuum pump is only capable of pumping down to 28 in. of mercury vacuum and system does not contain any liquid water. Refer to Fig. 20 and proceed as follows:

1. Pump system down to 28 in. of mercury and allow pump to continue operating for an additional 15 minutes.
2. Shut off vacuum pump.
3. Connect a nitrogen cylinder and regulator to system and open until system pressure is 2 psig.
4. Allow system to stand for 1 hr. During this time, dry nitrogen will be able to diffuse throughout the system absorbing moisture.
5. Repeat this procedure as indicated in Fig. 20. System will then be free of any contaminants and water vapor.

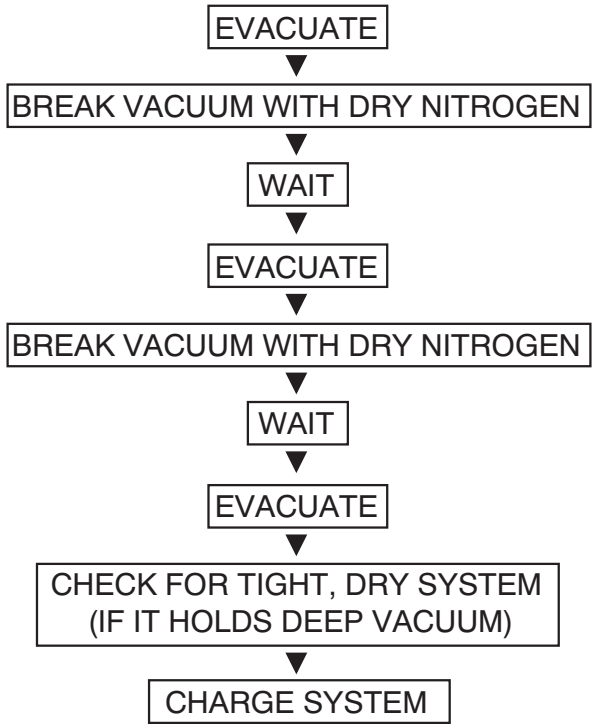


A95425

**Fig. 20 – Triple Evacuation Method**

## Check Charge

(See Charging Tables 6.)

Factory charge amount and desired subcooling are shown on unit rating plate. Charging method is shown on information plate inside unit. To properly check or adjust charge, conditions must be favorable for subcooling charging. Favorable conditions exist when the outdoor temperature is between 70°F and 100°F (21.11°C and 37.78°C), and the indoor temperature is between 70°F and 80°F (21.11°C and 26.67°C). Follow the procedure below:

To check charge allow system to operate in cooling mode at least 15 minutes. If conditions are favorable, check system charge by subcooling method. If any adjustment is necessary, adjust charge slowly and allow system to operate for 15 minutes to stabilize before declaring a properly charged system.

If the indoor temperature is above 80°F (26.67°C), and the outdoor temperature is in the favorable range, adjust system charge and allow the indoor temperature to drop to 80°F (26.67°C) before attempting to check system charge by subcooling method as described above.

If the indoor temperature is below 70°F (21.11°C), or the outdoor temperature is not in the favorable range, the charge level could then be checked at another time when the both indoor and outdoor temperatures are in a more favorable range.

## Troubleshooting with SuperHeat

This troubleshooting routine was developed to diagnose cooling problems using superheat in TXV systems. It is effective on heat pumps in cooling mode as well as air conditioners. The system must utilize a TXV as the expansion device in cooling mode.

### Basic Diagnostics

**NOTE:** When checking refrigerant charge and troubleshooting operating systems, the indoor airflow has significant effect on the determination. If you are at this stage, it is assumed you have already checked the subcooling once and believe the charge is correct. From this point, the airflow must be verified prior to proceeding, hence step 1 below.

1. Check or verify proper indoor airflow
   – Indoor air filter

– Duct dampers and supply registers are open
– Indoor coil for debris

2. Check subcooling at OD coil and discharge high flow valve
– Outdoor airflow (debris on coil, etc.)
– Set the subcooling at value listed on rating plate.
3. Check superheat at suction high flow service valve.
– If low (< 2°F), proceed to Low SuperHeat section.
– If between 2 and 20°F/-6.7°C valve is probably operating properly.
– If operation erratic (hunting), proceed to Hunting Superheat °F Superheat in repetition section.

**NOTE:** Hunting is when the valve superheat swings more than 10°.

## Low Superheat with Normal or Low Suction Pressure

**NOTE:** Normal or low suction pressure is considered for R-410A: < 135 psig

1. Re-check airflow and then check sensing bulb tightness, orientation on vapor tube and is properly wrapped.
• Low Superheat with Normal or Low Suction PressureIf OK proceed to Step 2
2. Check superheat at suction high flow service valve and Pseudo Evaporator Superheat.
• If both are less than 2°F, TXV likely not controlling properly, i.e. stuck open -> REPLACE VALVE
• If superheat is higher than 15°F, proceed to Step 3
3. Perform TXV function check.
• With system running, place sensing bulb in ice bath for ~1 minute -> superheat should increase.
– If no response, Replace Valve
– If OK proceed to Step 4
4. Check for even temperature distribution at outlet of each circuit of evaporator
• Greater than 15°F between circuits, distributor or coil has a restriction.
• If OK proceed to Step 5

## Low Superheat with High Suction Pressure

**NOTE:** High suction pressure is considered for R-410A: > ~135 psig. Component failure typically causes this condition.

5. Check airflow, sensing bulb tightness, orientation on vapor tube and ensure bulb is properly wrapped.
• If OK proceed to Step 6
6. Check that compressor is pumping properly

**NOTE:** Loose Rules of Thumb: Is discharge saturated ~20°F higher than ambient temperature? Is discharge superheat between 15 and 50?

• If OK proceed to Step 7
7. Recheck Airflow and Subcooling.
• If OK proceed to Replace Valve

## High Superheat with Normal or Low Pressure

**NOTE:** Normal or low suction pressure is considered:
R-410A < 135 psig.

8. Check for restriction in liquid line (kinked line, filter drier restricted, etc.)
• If OK proceed to Step 9
9. Check for restriction in suction line (kink, restricted suction filter drier etc.)
• If OK proceed to Step 10
10. Check power element cap tube is not broken
• If OK proceed to Step 11
11. Check that equalizer tube is not kinked or plugged
• If OK proceed to Step 12
12. Check that inlet screen is not restricted
• If OK proceed to Step 13
13. Replace Valve

## High Superheat with Normal or High Suction Pressure

**NOTE:** Normal to High suction pressure is considered for R-410A: > ~110 psig. An application issue or other system component failure typically causes this condition.

14. Check airflow, sensing bulb tightness, orientation on vapor tube and ensure bulb is properly wrapped.
• If OK proceed to Step 15
15. R-410A Systems: Make sure proper valve is used (Not R-22)
• If OK proceed to Step 16
16. Check for even temperature distribution at outlet of each circuit of evaporator
• If OK proceed to Step 17
17. Check for high evaporator load: Return Air Leaks, high indoor wet bulb and/or dry bulb temp, undersized system, etc.
• If OK proceed to Step 18
18. Check that compressor is pumping properly
• Loose Rule of Thumb: Is discharge saturated ~20°F higher than ambient temperature? Is discharge superheat between 15°F (-9.4°C) and 50°F (10°C)?

## Hunting Superheat

**NOTE:** Hunting is when the valve superheat swings more than 10°F Superheat in repetition. This is typically an application issue.

19. Check for obvious kinked or pinched distributor (capillary) tubes causing imbalance to the circuiting.
• If OK proceed to Step 20
20. Check that proper size valve is used per Product Literature.
• If OK proceed to Step 21
21. Check airflow, sensing bulb tightness, orientation on vapor tube and ensure bulb is properly wrapped.
• If OK proceed to Step 22
22. Check for even temperature distribution (±5° difference) at outlet of each circuit of evaporator and for even air distribution over all evaporator slabs
• If OK proceed to Step 23
23. Move sensing bulb further down suction line.
• If problem not corrected, replace valve

## Indoor Airflow and Airflow Adjustments

**⚠ CAUTION**

**UNIT OPERATION HAZARD**

Failure to follow this caution may result in equipment damage or improper operation.

For cooling operation, the recommended airflow is 350 to 450 cfm for each 12,000 Btuh of rated cooling capacity.

**NOTE:** Be sure that all supply- and return-air grilles are open, free from obstructions, and adjusted properly.

**⚠ WARNING**

**ELECTRICAL SHOCK HAZARD**

Failure to follow this warning could result in personal injury or death.

Disconnect electrical power to the unit and install lockout tag before changing blower speed.

Blower speed taps may be changed by removing the factory wired speed tap wire and replacing with a suitable alternate speed tap. See unit wiring diagram or installation manual for unit specific details. Models with

Advanced Dehumidification can be adjusted via the CFM ADJUST wire on the control board.

All model sizes are factory wired for rated airflow operation.

Be sure new airflow meets the range noted above and minimum electric heat CFM, if equipped. Refer to Table 5.

## Refrigerant Charge

Refrigerant Charge — The refrigerant system is fully charged with R-410A refrigerant and is tested and factory sealed. Amount of refrigerant charge is listed on unit's rating plate. Unit must operate a minimum of 15 minutes before checking charge.

**NOTE:** Adjustment of the refrigerant charge is not required unless the unit is suspected of not having the proper R-410A charge.

**NOTE:** Unit sizes 024-048 have fixed orifice refrigerant metering devices, the 060 size has a TXV. There is a different charging procedure for both expansion devices. Refer to the correct procedure for your unit.

NO CHARGE

Use standard evacuating techniques. After evacuating system, weigh in the specified amount of refrigerant (refer to unit's rating plate).

LOW CHARGE COOLING

Fixed Metering Device:

1. Operate unit a minimum of 10 minutes before checking charge.
2. Measure suction pressure by attaching an accurate gauge to compressor suction side service port.
3. Measure suction side temperature by attaching an accurate thermisitor type or electronic thermometer to suction line about 10 in. from compressor.
4. Measure outdoor air dry-bulb temperature with thermometer.
5. Measure indoor air (return air) wet-bulb temperature with a sling psychrometer or electronic equivalent.
6. Using Superheat Charging Table (Table 6) find outdoor temperature and indoor air wet-bulb temperature. At this intersection note superheat. Where a dash (--) appears on table do not attempt to charge unit under these conditions or refrigerant slugging may occur. In this situation refrigerant must be evacuated and weighed in. See rating plate for charge quantity.
7. Refer to Required Suction Tube Temp. Table (Table 6). Find superheat temperature located in Step 6 and suction pressure. At this intersection note suction line temperature.
8. If unit has a higher suction line temperature than charted temperature, add refrigerant until charted temperature is reached.
9. If unit has a lower suction line temperature than charted temperature, reclaim refrigerant until charted temperature is reached.
10. If outdoor air temperature or pressure at suction port changes, charge to new suction line temperature indicated on chart.

048-060 Units, TXV

1. Measure Discharge line pressure by attaching a gauge to the service port.
2. Measure the Liquid line temperature by attaching a temperature sensing device to it.
3. Insulate the temperature sensing device so that the Outdoor Ambient doesn't affect the reading.
4. Refer to the required Subcooling in Table 7 based on the model size and the Outdoor Ambient temperature.
5. Interpolate if the Outdoor ambient temperature lies in between the table values.
6. Find the Pressure Value in the table corresponding to the measured Pressure of the Compressor Discharge line.
7. Read across from the Pressure reading to obtain the Liquid line temperature for a required Subcooling.
8. Add Charge if the measured temperature is higher than the table value.
9. Remove charge if the measured temperature is lower than the table value.

## Heating Mode

**NOTE:** When charging is necessary during heating season, charge must be weighed in accordance with unit rating plate.

**Table 5 – Minimum Airflow for Safe Electric Heater Operation**

**Air Conditioner**

| A/C Unit Size | 24 | 30 | 36 | 42 | 48 | 60 |
|---|---|---|---|---|---|---|
| 14 SEER, 15 SEER | | | | | | |
| CFM | 800 | 1000 | 1200 | 1400 | 1600 | 1750 |

**Heat Pump**

| HP Unit Size | 24 | 30 | 36 | 42 | 48 | 60 |
|---|---|---|---|---|---|---|
| 14 SEER | | | | | | |
| CFM | 800 | 1025 | 1250 | 1400 | 1710 | 1800 |
| 15 SEER | | | | | | |
| CFM | 800 | 1000 | 1200 | 1400 | 1600 | 1750 |

## Table 6 – Superheat Charging

**SUPERHEAT CHARGING TABLE**
**(SUPERHEAT °F (°C) AT COMPRESSOR SUCTION SERVICE PORT)**

| OUTDOOR TEMP °F (°C) | EVAPORATOR ENTERING AIR °F (°C) WB | | | | | | | | | | | | | |
|---|---|---|---|---|---|---|---|---|---|---|---|---|---|---|
| | 50 (10) | 52 (11) | 54 (12) | 56 (13) | 58 (14) | 60 (16) | 62 (17) | 64 (18) | 66 (19) | 68 (20) | 70 (21) | 72 (22) | 74 (23) | 76 (24) |
| 55 (12.7) | 9 (5.0) | 12 (6.7) | 14 (7.8) | 17 (9.4) | 20 (11) | 23 (13) | 26 (14) | 29 (16) | 32 (18) | 35 (19) | 37 (21) | 40 (22) | 42 (23) | 45 (25) |
| 60 (15.6) | 7 (3.9) | 10 (5.6) | 12 (6.7) | 15 (8.3) | 18 (10) | 21 (12) | 24 (13) | 27 (15) | 30 (17) | 33 (18) | 35 (19) | 38 (21) | 40 (22) | 43 (24) |
| 65 (18.3) | -- | 6 (3.3) | 10 (5.6) | 13 (7.2) | 16 (8.9) | 19 (11) | 21 (12) | 24 (13) | 27 (15) | 30 (17) | 33 (18) | 36 (20) | 38 (21) | 41 (23) |
| 70 (21.1) | -- | – | 7 (3.9) | 10 (5.6) | 13 (7.2) | 16 (8.9) | 19 (11) | 21 (12) | 24 (13) | 27 (15) | 30 (17) | 33 (18) | 36 (20) | 39 (22) |
| 75 (23.9) | -- | – | -- | 6 (3.3) | 9 (5.0) | 12 (6.7) | 15 (8.3) | 18 (10) | 21 (12) | 24 (13) | 28 (16) | 31 (17) | 34 (19) | 37 (21) |
| 80 (26.7) | -- | – | -- | – | 5 (2.8) | 8 (4.4) | 12 (6.7) | 15 (8.3) | 18 (10) | 21 (12) | 25 (14) | 28 (16) | 31 (17) | 35 (19) |
| 85 (29.4) | -- | – | -- | – | – | – | 8 (4.4) | 11 (6.1) | 15 (8.3) | 19 (11) | 22 (12) | 26 (14) | 30 (17) | 33 (18) |
| 90 (32.2) | -- | – | -- | – | – | – | 5 (2.8) | 9 (5.0) | 13 (7.2) | 16 (8.9) | 20 (11) | 24 (13) | 27 (15) | 31 (17) |
| 95 (35.0) | -- | – | -- | – | – | – | – | 6 (3.3) | 10 (5.6) | 14 (7.8) | 18 (10) | 22 (12) | 25 (14) | 29 (16) |
| 100 (37.7) | -- | – | -- | – | – | – | – | -- | 8 (4.4) | 12 (6.7) | 15 (8.3) | 20 (11) | 23 (13) | 27 (15) |
| 105 (40.6) | -- | – | -- | – | – | – | – | -- | 5 (2.8) | 9 (5.0) | 13 (7.2) | 17 (9.4) | 22 (12) | 26 (14) |
| 110 (43.3) | -- | – | -- | – | – | – | – | -- | – | 6 (3.3) | 11 (6.1) | 15 (8.3) | 20 (11) | 25 (14) |
| 115 (46.1) | -- | – | -- | – | – | – | – | -- | – | – | 8 (4.4) | 14 (7.8) | 18 (10) | 23 (13) |

**REQUIRED SUCTION TUBE TEMPERATURE °F (°C)**
**(MEASURED AT COMPRESSOR SUCTION SERVICE PORT)**

| SUPERHEAT TEMP °F (°C) | SUCTION PRESSURE AT SUCTION SERVICE PORT PSIG (kPa) | | | | | | | | |
|---|---|---|---|---|---|---|---|---|---|
| | 107 (738) | 111 (766) | 116 (800) | 120 (828) | 125 (862) | 130 (897) | 135 (931) | 140 (966) | 145 (1000) |
| 0 (0) | 35 (1.7) | 37 (2.8) | 39 (3.9) | 41 (5.0) | 43 (6.1) | 45 (7.2) | 47 (8.3) | 49 (9.4) | 51 (11) |
| 2 (1.1) | 37 (2.8) | 39 (3.9) | 41 (5.0) | 43 (6.1) | 45 (7.2) | 47 (8.3) | 49 (9.4) | 51 (11) | 53 (12) |
| 4 (2.2) | 39 (3.9) | 41 (5.0) | 43 (6.1) | 45 (7.2) | 47 (8.3) | 49 (9.4) | 51 (11) | 53 (12) | 55 (13) |
| 6 (3.3) | 41 (5.0) | 43 (6.1) | 45 (7.2) | 47 (8.3) | 49 (9.4) | 51 (11) | 53 (12) | 55 (13) | 57 (14) |
| 8 (4.4) | 43 (6.1) | 45 (7.2) | 47 (8.3) | 49 (9.4) | 51 (11) | 53 (12) | 55 (13) | 57 (14) | 59 (15) |
| 10 (5.6) | 45 (7.2) | 47 (8.3) | 49 (9.4) | 51 (11) | 53 (12) | 55 (13) | 57 (14) | 59 (15) | 61 (16) |
| 12 (6.7) | 47 (8.3) | 49 (9.4) | 51 (11) | 53 (12) | 55 (13) | 57 (14) | 59 (15) | 61 (16) | 63 (17) |
| 14 (7.8) | 49 (9.4) | 51 (11) | 53 (12) | 55 (13) | 57 (14) | 59 (15) | 61 (16) | 63 (17) | 65 (18) |
| 16 (8.9) | 51 (11) | 53 (12) | 55 (13) | 57 (14) | 59 (15) | 61 (16) | 63 (17) | 65 (18) | 67 (19) |
| 18 (10.0) | 53 (12) | 55 (13) | 57 (14) | 59 (15) | 61 (16) | 63 (17) | 65 (18) | 67 (19) | 69 (21) |
| 20 (11.1) | 55 (13) | 57 (14) | 59 (15) | 61 (16) | 63 (17) | 65 (18) | 67 (19) | 69 (21) | 71 (22) |
| 22 (12.2) | 57 (14) | 59 (15) | 61 (16) | 63 (17) | 65 (18) | 67 (19) | 69 (21) | 71 (22) | 73 (23) |
| 24 (13.3) | 59 (15) | 61 (16) | 63 (17) | 65 (18) | 67 (19) | 69 (21) | 71 (22) | 73 (23) | 75 (24) |
| 26 (14.4) | 61 (16) | 63 (17) | 65 (18) | 67 (19) | 69 (21) | 71 (22) | 73 (23) | 75 (24) | 77 (25) |
| 28 (15.6) | 63 (17) | 65 (18) | 67 (19) | 69 (21) | 71 (22) | 73 (23) | 75 (24) | 77 (25) | 79 (26) |
| 30 (16.7) | 65 (18) | 67 (19) | 69 (21) | 71 (22) | 73 (23) | 75 (24) | 77 (25) | 79 (26) | 81 (27) |
| 32 (17.8) | 67 (19) | 69 (21) | 71 (22) | 73 (23) | 75 (24) | 77 (25) | 79 (26) | 81 (27) | 83 (28) |
| 34 (18.9) | 69 (21) | 71 (22) | 73 (23) | 75 (24) | 79 (26) | 79 (26) | 81 (27) | 83 (28) | 85 (29) |
| 36 (20.0) | 71 (22) | 73 (23) | 75 (24) | 81 (27) | 81 (27) | 81 (27) | 83 (28) | 85 (29) | 87 (31) |
| 38 (21.1) | 73 (23) | 75 (24) | 83 (28) | 83 (28) | 83 (28) | 83 (28) | 85 (29) | 87 (31) | 89 (32) |
| 40 (22.2) | 75 (24) | 85 (29) | 85 (29) | 85 (29) | 85 (29) | 85 (29) | 87 (31) | 89 (32) | 91 (33) |

50ZH500518 REV. A

### COOLING ONLY CHARGING PROCEDURE

1. Operate unit a minimum of 10 minutes before checking charge.
2. Measure suction pressure by attaching an accurate gauge to compressor suction side service port.
3. Measure suction side temperature by attaching an accurate thermisitor type or electronic thermometer to suction line about 10 inches from compressor.
4. Measure outdoor air dry-bulb temperature with thermometer.
5. Measure indoor air (return air) wet-bulb temperature with a sling psychrometer or electronic equivalent.
6. Using Superheat Charging Table find outdoor temperature and indoor air wet-bulb temperature. At this intersection note superheat. Where a dash (--) appears on table do not attempt to charge unit under these conditions or refrigerant slugging may occur. In this situation refrigerant must be evacuated and weighed in. See rating plate for charge quantity.
7. Refer to Required Suction Tube Temp. table. Find superheat temperature located in step 6 and suction pressure. At this intersection note suction line temperature.
8. If unit has a higher suction line temperature than charted temperature, add refrigerant until charted temperature is reached.
9. If unit has a lower suction line temperature than charted temperature, reclaim refrigerant until charted temperature is reached.
10. If outdoor air temperature or pressure at suction port changes, charge to new suction line temperature indicated on chart.

50ZH500518 REV.A

A150625

Superheat charging table is derived from optimum performance point. (95°F [35°C] outdoor ambient and (80°F [27°C] dry bulb; 67°F [19°C] wet bulb indoor condition.) Where a dash(--) appears do not attempt to check charge or charge unit under these conditions using the superheat method. (Weigh in method should be used.)

## Table 7 – Required Subcooling

| Required Subcooling °F(°C) | | | | | |
|---|---|---|---|---|---|
| Model Size | Outdoor Ambient Temperature °F(°C) | | | | |
| | 75 (24) | 85 (29) | 95 (35) | 105 (41) | 115 (46) |
| 036 | 13 (7) | 13 (7.2) | 13 (7.3) | 13(7.4) | 14(7.7) |

**Charging Procedure**

1- Measure Discharge line pressure by attaching a gauge to the service port.

2- Measure the Liquid line temperature by attaching a temperature sensing device to it.

3- Insulate the temperature sensing device so that the Outdoor Ambient doesn't affect the reading.

4- Refer to the required Subcooling in the table based on the model size and the Outdoor Ambient temperature.

5- Interpolate if the Outdoor ambient temperature lies in between the table values.

6- Find the Pressure Value in the table corresponding to the the measured Pressure of the Compressor Discharge line.

7- Read across from the Pressure reading to obtain the Liquid line temperature for a required Subcooling

8- Add Charge if the measured temperature is higher than the table value.

9 - Remove charge if the measured temperature is lower than the table value.

50VL500709 REV. -

| Required Liquid Line Temperature for a Specific Subcooling (R-410A) | | | | | | | | | | | | | | |
|---|---|---|---|---|---|---|---|---|---|---|---|---|---|---|
| Pressure (psig) | Required Subcooling (°F) | | | | | Pressure (kPa) | Required Subcooling (°C) | | | | |
| | 5 | 10 | 15 | 20 | 25 | | 3 | 6 | 8 | 11 | 14 |
| 189 | 61 | 56 | 51 | 46 | 41 | 1303 | 16 | 13 | 11 | 8 | 5 |
| 196 | 63 | 58 | 53 | 48 | 43 | 1351 | 17 | 15 | 12 | 9 | 6 |
| 203 | 66 | 61 | 56 | 51 | 46 | 1399 | 19 | 16 | 13 | 10 | 8 |
| 210 | 68 | 63 | 58 | 53 | 48 | 1448 | 20 | 17 | 14 | 11 | 9 |
| 217 | 70 | 65 | 60 | 55 | 50 | 1496 | 21 | 18 | 15 | 13 | 10 |
| 224 | 72 | 67 | 62 | 57 | 52 | 1544 | 22 | 19 | 16 | 14 | 11 |
| 231 | 74 | 69 | 64 | 59 | 54 | 1593 | 23 | 20 | 18 | 15 | 12 |
| 238 | 76 | 71 | 66 | 61 | 56 | 1641 | 24 | 21 | 19 | 16 | 13 |
| 245 | 77 | 72 | 67 | 62 | 57 | 1689 | 25 | 22 | 20 | 17 | 14 |
| 252 | 79 | 74 | 69 | 64 | 59 | 1737 | 26 | 23 | 21 | 18 | 15 |
| 260 | 81 | 76 | 71 | 66 | 61 | 1792 | 27 | 25 | 22 | 19 | 16 |
| 268 | 83 | 78 | 73 | 68 | 63 | 1848 | 29 | 26 | 23 | 20 | 17 |
| 276 | 85 | 80 | 75 | 70 | 65 | 1903 | 30 | 27 | 24 | 21 | 19 |
| 284 | 87 | 82 | 77 | 72 | 67 | 1958 | 31 | 28 | 25 | 22 | 20 |
| 292 | 89 | 84 | 79 | 74 | 69 | 2013 | 32 | 29 | 26 | 23 | 21 |
| 300 | 91 | 86 | 81 | 76 | 71 | 2068 | 33 | 30 | 27 | 24 | 22 |
| 309 | 93 | 88 | 83 | 78 | 73 | 2130 | 34 | 31 | 28 | 26 | 23 |
| 318 | 95 | 90 | 85 | 80 | 75 | 2192 | 35 | 32 | 29 | 27 | 24 |
| 327 | 97 | 92 | 87 | 82 | 77 | 2254 | 36 | 33 | 31 | 28 | 25 |
| 336 | 99 | 94 | 89 | 84 | 79 | 2316 | 37 | 34 | 32 | 29 | 26 |
| 345 | 101 | 96 | 91 | 86 | 81 | 2378 | 38 | 35 | 33 | 30 | 27 |
| 354 | 103 | 98 | 93 | 88 | 83 | 2440 | 39 | 36 | 34 | 31 | 28 |
| 364 | 105 | 100 | 95 | 90 | 85 | 2509 | 40 | 38 | 35 | 32 | 29 |
| 374 | 107 | 102 | 97 | 92 | 87 | 2578 | 41 | 39 | 36 | 33 | 30 |
| 384 | 108 | 103 | 98 | 93 | 88 | 2647 | 42 | 40 | 37 | 34 | 31 |
| 394 | 110 | 105 | 100 | 95 | 90 | 2716 | 44 | 41 | 38 | 35 | 32 |
| 404 | 112 | 107 | 102 | 97 | 92 | 2785 | 45 | 42 | 39 | 36 | 33 |
| 414 | 114 | 109 | 104 | 99 | 94 | 2854 | 46 | 43 | 40 | 37 | 34 |
| 424 | 116 | 111 | 106 | 101 | 96 | 2923 | 47 | 44 | 41 | 38 | 35 |
| 434 | 118 | 113 | 108 | 103 | 98 | 2992 | 48 | 45 | 42 | 39 | 36 |
| 444 | 119 | 114 | 109 | 104 | 99 | 3061 | 48 | 46 | 43 | 40 | 37 |
| 454 | 121 | 116 | 111 | 106 | 101 | 3130 | 49 | 47 | 44 | 41 | 38 |
| 464 | 123 | 118 | 113 | 108 | 103 | 3199 | 50 | 48 | 45 | 42 | 39 |
| 474 | 124 | 119 | 114 | 109 | 104 | 3268 | 51 | 48 | 46 | 43 | 40 |
| 484 | 126 | 121 | 116 | 111 | 106 | 3337 | 52 | 49 | 47 | 44 | 41 |
| 494 | 127 | 122 | 117 | 112 | 107 | 3406 | 53 | 50 | 47 | 45 | 42 |
| 504 | 129 | 124 | 119 | 114 | 109 | 3475 | 54 | 51 | 48 | 46 | 43 |
| 514 | 131 | 126 | 121 | 116 | 111 | 3544 | 55 | 52 | 49 | 46 | 44 |
| 524 | 132 | 127 | 122 | 117 | 112 | 3612 | 56 | 53 | 50 | 47 | 45 |
| 534 | 134 | 129 | 124 | 119 | 114 | 3681 | 56 | 54 | 51 | 48 | 45 |

50VL500709 REV. -

A150626

Superheat charging table is derived from optimum performance point. (95°F [35°C] outdoor ambient and (80°F [27°C] dry bulb; 67°F [19°C] wet bulb indoor condition.) Where a dash(--) appears do not attempt to check charge or charge unit under these conditions using the superheat method. (Weigh in method should be used.)

## 14 SEER Gas Heat /Air Conditioner

| Required Subcooling °F(°C) | | | | | |
|---|---|---|---|---|---|
| Model Size | Outdoor Ambient Temperature °F(°C) | | | | |
| | 75 (24) | 85 (29) | 95 (35) | 105 (41) | 115 (46) |
| 024 | 15(8.4) | 15(8.3) | 15(8.3) | 15(8.1) | 15(8.4) |
| 030 | 15(8.3) | 15(8.6) | 16(8.7) | 15(8.6) | 15(8.3) |
| 036 | 15(8.3) | 15(8.4) | 16(8.7) | 16(8.8) | 16(8.8) |
| 042 | 19(10.7) | 20(10.9) | 20(10.9) | 20(11.2) | 21(11.4) |
| 060 | 11(6.3) | 11(6) | 10(5.6) | 10(5.7) | 10(5.4) |

**Charging Procedure**

1- Measure Discharge line pressure by attaching a gauge to the service port.

2- Measure the Liquid line temperature by attaching a temperature sensing device to it.

3- Insulate the temperature sensing device so that the Outdoor Ambient doesn't affect the reading.

4- Refer to the required Subcooling in the table based on the model size and the Outdoor Ambient temperature.

5- Interpolate if the Outdoor ambient temperature lies in between the table values.

6- Find the Pressure Value in the table corresponding to the the measured Pressure of the Compressor Discharge line.

7- Read across from the Pressure reading to obtain the Liquid line temperature for a required Subcooling

8- Add Charge if the measured temperature is higher than the table value.

9 - Remove charge if the measured temperature is lower than the table value.

50VT500594 REV. -

| Required Liquid Line Temperature for a Specific Subcooling (R-410A) | | | | | | | | | | | | | | |
|---|---|---|---|---|---|---|---|---|---|---|---|---|---|---|
| Pressure (psig) | Required Subcooling (°F) | | | | | Pressure (kPa) | Required Subcooling (°C) | | | | |
| | 5 | 10 | 15 | 20 | 25 | | 3 | 6 | 8 | 11 | 14 |
| 189 | 61 | 56 | 51 | 46 | 41 | 1303 | 16 | 13 | 11 | 8 | 5 |
| 196 | 63 | 58 | 53 | 48 | 43 | 1351 | 17 | 15 | 12 | 9 | 6 |
| 203 | 66 | 61 | 56 | 51 | 46 | 1399 | 19 | 16 | 13 | 10 | 8 |
| 210 | 68 | 63 | 58 | 53 | 48 | 1448 | 20 | 17 | 14 | 11 | 9 |
| 217 | 70 | 65 | 60 | 55 | 50 | 1496 | 21 | 18 | 15 | 13 | 10 |
| 224 | 72 | 67 | 62 | 57 | 52 | 1544 | 22 | 19 | 16 | 14 | 11 |
| 231 | 74 | 69 | 64 | 59 | 54 | 1593 | 23 | 20 | 18 | 15 | 12 |
| 238 | 76 | 71 | 66 | 61 | 56 | 1641 | 24 | 21 | 19 | 16 | 13 |
| 245 | 77 | 72 | 67 | 62 | 57 | 1689 | 25 | 22 | 20 | 17 | 14 |
| 252 | 79 | 74 | 69 | 64 | 59 | 1737 | 26 | 23 | 21 | 18 | 15 |
| 260 | 81 | 76 | 71 | 66 | 61 | 1792 | 27 | 25 | 22 | 19 | 16 |
| 268 | 83 | 78 | 73 | 68 | 63 | 1848 | 29 | 26 | 23 | 20 | 17 |
| 276 | 85 | 80 | 75 | 70 | 65 | 1903 | 30 | 27 | 24 | 21 | 19 |
| 284 | 87 | 82 | 77 | 72 | 67 | 1958 | 31 | 28 | 25 | 22 | 20 |
| 292 | 89 | 84 | 79 | 74 | 69 | 2013 | 32 | 29 | 26 | 23 | 21 |
| 300 | 91 | 86 | 81 | 76 | 71 | 2068 | 33 | 30 | 27 | 24 | 22 |
| 309 | 93 | 88 | 83 | 78 | 73 | 2130 | 34 | 31 | 28 | 26 | 23 |
| 318 | 95 | 90 | 85 | 80 | 75 | 2192 | 35 | 32 | 29 | 27 | 24 |
| 327 | 97 | 92 | 87 | 82 | 77 | 2254 | 36 | 33 | 31 | 28 | 25 |
| 336 | 99 | 94 | 89 | 84 | 79 | 2316 | 37 | 34 | 32 | 29 | 26 |
| 345 | 101 | 96 | 91 | 86 | 81 | 2378 | 38 | 35 | 33 | 30 | 27 |
| 354 | 103 | 98 | 93 | 88 | 83 | 2440 | 39 | 36 | 34 | 31 | 28 |
| 364 | 105 | 100 | 95 | 90 | 85 | 2509 | 40 | 38 | 35 | 32 | 29 |
| 374 | 107 | 102 | 97 | 92 | 87 | 2578 | 41 | 39 | 36 | 33 | 30 |
| 384 | 108 | 103 | 98 | 93 | 88 | 2647 | 42 | 40 | 37 | 34 | 31 |
| 394 | 110 | 105 | 100 | 95 | 90 | 2716 | 44 | 41 | 38 | 35 | 32 |
| 404 | 112 | 107 | 102 | 97 | 92 | 2785 | 45 | 42 | 39 | 36 | 33 |
| 414 | 114 | 109 | 104 | 99 | 94 | 2854 | 46 | 43 | 40 | 37 | 34 |
| 424 | 116 | 111 | 106 | 101 | 96 | 2923 | 47 | 44 | 41 | 38 | 35 |
| 434 | 118 | 113 | 108 | 103 | 98 | 2992 | 48 | 45 | 42 | 39 | 36 |
| 444 | 119 | 114 | 109 | 104 | 99 | 3061 | 48 | 46 | 43 | 40 | 37 |
| 454 | 121 | 116 | 111 | 106 | 101 | 3130 | 49 | 47 | 44 | 41 | 38 |
| 464 | 123 | 118 | 113 | 108 | 103 | 3199 | 50 | 48 | 45 | 42 | 39 |
| 474 | 124 | 119 | 114 | 109 | 104 | 3268 | 51 | 48 | 46 | 43 | 40 |
| 484 | 126 | 121 | 116 | 111 | 106 | 3337 | 52 | 49 | 47 | 44 | 41 |
| 494 | 127 | 122 | 117 | 112 | 107 | 3406 | 53 | 50 | 47 | 45 | 42 |
| 504 | 129 | 124 | 119 | 114 | 109 | 3475 | 54 | 51 | 48 | 46 | 43 |
| 514 | 131 | 126 | 121 | 116 | 111 | 3544 | 55 | 52 | 49 | 46 | 44 |
| 524 | 132 | 127 | 122 | 117 | 112 | 3612 | 56 | 53 | 50 | 47 | 45 |
| 534 | 134 | 129 | 124 | 119 | 114 | 3681 | 56 | 54 | 51 | 48 | 45 |

50VT500594 REV. -

A150627

To properly check or adjust charge, conditions must be favorable for subcooling charging. Favorable conditions exist when the outdoor temperature is between 75°F to 115°F (24°C and 46°C), and the indoor temperature is between 70°F and 80°F (21°C and 27°C). Follow the procedure above.

## 14 SEER Heat Pump / Hybrid Dual Fuel

| Required Subcooling °F(°C) | | | | | |
|---|---|---|---|---|---|
| Model Size | Outdoor Ambient Temperature °F(°C) | | | | |
| | 75 (24) | 85 (29) | 95 (35) | 105 (41) | 115 (46) |
| | | | | | |
| 024 | 15 (8.2) | 15 (8.2) | 13 (7.5) | 11 (6.2) | 11 (6.2) |
| 030 | 12 (6.9) | 12 (6.9) | 12 (6.9) | 11 (6.2) | 11 (6.2) |
| 036 | 12 (6.9) | 12 (6.9) | 12 (6.9) | 11 (6.2) | 10 (5.6) |
| 042 | 15 (8.2) | 14 (7.8) | 14 (7.8) | 12 (6.9) | 11 (6.2) |
| 048 | 14 (7.8) | 13 (7.5) | 13 (7.5) | 13 (7.5) | 12 (6.9) |
| 060 | 18 (9.9) | 18 (9.9) | 18 (9.9) | 17 (9.4) | 17 (9.4) |

**NOTE: Subcooling values calculated using High Stage.**

## Charging Procedure

1. Measure Discharge line pressure by attaching a gauge to the service port.
2. Measure the liquid line temperature by attaching a temperature sensing device to it.
3. Insulate the temperature sensing device so that the Outdoor Ambient doesn't affect the reading.
4. Refer to the required Subcooling in the table based on the model size and the Outdoor Ambient temperature.
5. Interpolate if the Outdoor ambient temperature lies in between the table values.
6. Find the Pressure Value in the table corresponding to the measured Pressure of the Compressor Discharge line.
7. Read across from the Pressure reading to obtain the liquid line temperature for a required Subcooling.
8. Add charge if the measured temperature is higher than the table value.
9. Remove charge if the measured temperature is lower than the table value.

50VG500083 REV. -

50VG500083 REV. -

| Required Liquid Line Temperature for a Specific Subcooling (R-410A) | | | | | | | | | | | | |
|---|---|---|---|---|---|---|---|---|---|---|---|---|
| | Required Subcooling (°F) | | | | | | Required Subcooling (°C) | | | | | |
| Pressure (psig) | 5 | 10 | 15 | 20 | 25 | Pressure (kPa) | 3 | 6 | 8 | 11 | 14 |
| 189 | 61 | 56 | 51 | 46 | 41 | 1303 | 16 | 13 | 11 | 8 | 5 |
| 196 | 63 | 58 | 53 | 48 | 43 | 1351 | 17 | 15 | 12 | 9 | 6 |
| 203 | 66 | 61 | 56 | 51 | 46 | 1399 | 19 | 16 | 13 | 10 | 8 |
| 210 | 68 | 63 | 58 | 53 | 48 | 1448 | 20 | 17 | 14 | 11 | 9 |
| 217 | 70 | 65 | 60 | 55 | 50 | 1496 | 21 | 18 | 15 | 13 | 10 |
| 224 | 72 | 67 | 62 | 57 | 52 | 1544 | 22 | 19 | 16 | 14 | 11 |
| 231 | 74 | 69 | 64 | 59 | 54 | 1593 | 23 | 20 | 18 | 15 | 12 |
| 238 | 76 | 71 | 66 | 61 | 56 | 1641 | 24 | 21 | 19 | 16 | 13 |
| 245 | 77 | 72 | 67 | 62 | 57 | 1689 | 25 | 22 | 20 | 17 | 14 |
| 252 | 79 | 74 | 69 | 64 | 59 | 1737 | 26 | 23 | 21 | 18 | 15 |
| 260 | 81 | 76 | 71 | 66 | 61 | 1792 | 27 | 25 | 22 | 19 | 16 |
| 268 | 83 | 78 | 73 | 68 | 63 | 1848 | 29 | 26 | 23 | 20 | 17 |
| 276 | 85 | 80 | 75 | 70 | 65 | 1903 | 30 | 27 | 24 | 21 | 19 |
| 284 | 87 | 82 | 77 | 72 | 67 | 1958 | 31 | 28 | 25 | 22 | 20 |
| 292 | 89 | 84 | 79 | 74 | 69 | 2013 | 32 | 29 | 26 | 23 | 21 |
| 300 | 91 | 86 | 81 | 76 | 71 | 2068 | 33 | 30 | 27 | 24 | 22 |
| 309 | 93 | 88 | 83 | 78 | 73 | 2130 | 34 | 31 | 28 | 26 | 23 |
| 318 | 95 | 90 | 85 | 80 | 75 | 2192 | 35 | 32 | 29 | 27 | 24 |
| 327 | 97 | 92 | 87 | 82 | 77 | 2254 | 36 | 33 | 31 | 28 | 25 |
| 336 | 99 | 94 | 89 | 84 | 79 | 2316 | 37 | 34 | 32 | 29 | 26 |
| 345 | 101 | 96 | 91 | 86 | 81 | 2378 | 38 | 35 | 33 | 30 | 27 |
| 354 | 103 | 98 | 93 | 88 | 83 | 2440 | 39 | 36 | 34 | 31 | 28 |
| 364 | 105 | 100 | 95 | 90 | 85 | 2509 | 40 | 38 | 35 | 32 | 29 |
| 374 | 107 | 102 | 97 | 92 | 87 | 2578 | 41 | 39 | 36 | 33 | 30 |
| 384 | 108 | 103 | 98 | 93 | 88 | 2647 | 42 | 40 | 37 | 34 | 31 |
| 394 | 110 | 105 | 100 | 95 | 90 | 2716 | 44 | 41 | 38 | 35 | 32 |
| 404 | 112 | 107 | 102 | 97 | 92 | 2785 | 45 | 42 | 39 | 36 | 33 |
| 414 | 114 | 109 | 104 | 99 | 94 | 2854 | 46 | 43 | 40 | 37 | 34 |
| 424 | 116 | 111 | 106 | 101 | 96 | 2923 | 47 | 44 | 41 | 38 | 35 |
| 434 | 118 | 113 | 108 | 103 | 98 | 2992 | 48 | 45 | 42 | 39 | 36 |
| 444 | 119 | 114 | 109 | 104 | 99 | 3061 | 48 | 46 | 43 | 40 | 37 |
| 454 | 121 | 116 | 111 | 106 | 101 | 3130 | 49 | 47 | 44 | 41 | 38 |
| 464 | 123 | 118 | 113 | 108 | 103 | 3199 | 50 | 48 | 45 | 42 | 39 |
| 474 | 124 | 119 | 114 | 109 | 104 | 3268 | 51 | 48 | 46 | 43 | 40 |
| 484 | 126 | 121 | 116 | 111 | 106 | 3337 | 52 | 49 | 47 | 44 | 41 |
| 494 | 127 | 122 | 117 | 112 | 107 | 3406 | 53 | 50 | 47 | 45 | 42 |
| 504 | 129 | 124 | 119 | 114 | 109 | 3475 | 54 | 51 | 48 | 46 | 43 |
| 514 | 131 | 126 | 121 | 116 | 111 | 3544 | 55 | 52 | 49 | 46 | 44 |
| 524 | 132 | 127 | 122 | 117 | 112 | 3612 | 56 | 53 | 50 | 47 | 45 |
| 534 | 134 | 129 | 124 | 119 | 114 | 3681 | 56 | 54 | 51 | 48 | 45 |

A12578

**15 SEER Gas Heat/Electric Cool**

| Required Subcooling °F(°C) | | | | | |
|---|---|---|---|---|---|
| Model Size | Outdoor Ambient Temperature °F(°C) | | | | |
| | 75 (24) | 85 (29) | 95 (35) | 105 (41) | 115 (46) |
| | | | | | |
| 024 | 12 (6.9) | 12 (6.9) | 12 (6.9) | 10 (5.6) | 9 (5.0) |
| 030 | 13 (7.5) | 12 (6.9) | 13 (7.5) | 13 (7.5) | 12 (6.9) |
| 036 | 17 (9.4) | 16 (8.8) | 16 (8.8) | 15 (8.2) | 15 (8.2) |
| 042 | 14 (7.8) | 14 (7.8) | 13 (7.5) | 13 (7.5) | 13 (6.5) |
| 048 | 15 (8.2) | 15 (8.2) | 15 (8.2) | 15 (8.2) | 14 (7.8) |
| 060 | 17 (9.4) | 16 (8.8) | 16 (8.8) | 15 (8.2) | 15 (8.2) |

**NOTE: Subcooling values calculated using High Stage.**

## Charging Procedure

1. Measure Discharge line pressure by attaching a gauge to the service port.
2. Measure the liquid line temperature by attaching a temperature sensing device to it.
3. Insulate the temperature sensing device so that the Outdoor Ambient doesn't affect the reading.
4. Refer to the required Subcooling in the table based on the model size and the Outdoor Ambient temperature.
5. Interpolate if the Outdoor ambient temperature lies in between the table values.
6. Find the Pressure Value in the table corresponding to the measured Pressure of the Compressor Discharge line.
7. Read across from the Pressure reading to obtain the liquid line temperature for a required Subcooling.
8. Add charge if the measured temperature is higher than the table value.
9. Remove charge if the measured temperature is lower than the table value.

50VR500110 REV. -

50VR500110 REV. -

| Required Liquid Line Temperature for a Specific Subcooling (R-410A) | | | | | | | | | | | | |
|---|---|---|---|---|---|---|---|---|---|---|---|---|
| | Required Subcooling (°F) | | | | | | Required Subcooling (°C) | | | | | |
| Pressure (psig) | 5 | 10 | 15 | 20 | 25 | Pressure (kPa) | 3 | 6 | 8 | 11 | 14 |
| 189 | 61 | 56 | 51 | 46 | 41 | 1303 | 16 | 13 | 11 | 8 | 5 |
| 196 | 63 | 58 | 53 | 48 | 43 | 1351 | 17 | 15 | 12 | 9 | 6 |
| 203 | 66 | 61 | 56 | 51 | 46 | 1399 | 19 | 16 | 13 | 10 | 8 |
| 210 | 68 | 63 | 58 | 53 | 48 | 1448 | 20 | 17 | 14 | 11 | 9 |
| 217 | 70 | 65 | 60 | 55 | 50 | 1496 | 21 | 18 | 15 | 13 | 10 |
| 224 | 72 | 67 | 62 | 57 | 52 | 1544 | 22 | 19 | 16 | 14 | 11 |
| 231 | 74 | 69 | 64 | 59 | 54 | 1593 | 23 | 20 | 18 | 15 | 12 |
| 238 | 76 | 71 | 66 | 61 | 56 | 1641 | 24 | 21 | 19 | 16 | 13 |
| 245 | 77 | 72 | 67 | 62 | 57 | 1689 | 25 | 22 | 20 | 17 | 14 |
| 252 | 79 | 74 | 69 | 64 | 59 | 1737 | 26 | 23 | 21 | 18 | 15 |
| 260 | 81 | 76 | 71 | 66 | 61 | 1792 | 27 | 25 | 22 | 19 | 16 |
| 268 | 83 | 78 | 73 | 68 | 63 | 1848 | 29 | 26 | 23 | 20 | 17 |
| 276 | 85 | 80 | 75 | 70 | 65 | 1903 | 30 | 27 | 24 | 21 | 19 |
| 284 | 87 | 82 | 77 | 72 | 67 | 1958 | 31 | 28 | 25 | 22 | 20 |
| 292 | 89 | 84 | 79 | 74 | 69 | 2013 | 32 | 29 | 26 | 23 | 21 |
| 300 | 91 | 86 | 81 | 76 | 71 | 2068 | 33 | 30 | 27 | 24 | 22 |
| 309 | 93 | 88 | 83 | 78 | 73 | 2130 | 34 | 31 | 28 | 26 | 23 |
| 318 | 95 | 90 | 85 | 80 | 75 | 2192 | 35 | 32 | 29 | 27 | 24 |
| 327 | 97 | 92 | 87 | 82 | 77 | 2254 | 36 | 33 | 31 | 28 | 25 |
| 336 | 99 | 94 | 89 | 84 | 79 | 2316 | 37 | 34 | 32 | 29 | 26 |
| 345 | 101 | 96 | 91 | 86 | 81 | 2378 | 38 | 35 | 33 | 30 | 27 |
| 354 | 103 | 98 | 93 | 88 | 83 | 2440 | 39 | 36 | 34 | 31 | 28 |
| 364 | 105 | 100 | 95 | 90 | 85 | 2509 | 40 | 38 | 35 | 32 | 29 |
| 374 | 107 | 102 | 97 | 92 | 87 | 2578 | 41 | 39 | 36 | 33 | 30 |
| 384 | 108 | 103 | 98 | 93 | 88 | 2647 | 42 | 40 | 37 | 34 | 31 |
| 394 | 110 | 105 | 100 | 95 | 90 | 2716 | 44 | 41 | 38 | 35 | 32 |
| 404 | 112 | 107 | 102 | 97 | 92 | 2785 | 45 | 42 | 39 | 36 | 33 |
| 414 | 114 | 109 | 104 | 99 | 94 | 2854 | 46 | 43 | 40 | 37 | 34 |
| 424 | 116 | 111 | 106 | 101 | 96 | 2923 | 47 | 44 | 41 | 38 | 35 |
| 434 | 118 | 113 | 108 | 103 | 98 | 2992 | 48 | 45 | 42 | 39 | 36 |
| 444 | 119 | 114 | 109 | 104 | 99 | 3061 | 48 | 46 | 43 | 40 | 37 |
| 454 | 121 | 116 | 111 | 106 | 101 | 3130 | 49 | 47 | 44 | 41 | 38 |
| 464 | 123 | 118 | 113 | 108 | 103 | 3199 | 50 | 48 | 45 | 42 | 39 |
| 474 | 124 | 119 | 114 | 109 | 104 | 3268 | 51 | 48 | 46 | 43 | 40 |
| 484 | 126 | 121 | 116 | 111 | 106 | 3337 | 52 | 49 | 47 | 44 | 41 |
| 494 | 127 | 122 | 117 | 112 | 107 | 3406 | 53 | 50 | 47 | 45 | 42 |
| 504 | 129 | 124 | 119 | 114 | 109 | 3475 | 54 | 51 | 48 | 46 | 43 |
| 514 | 131 | 126 | 121 | 116 | 111 | 3544 | 55 | 52 | 49 | 46 | 44 |
| 524 | 132 | 127 | 122 | 117 | 112 | 3612 | 56 | 53 | 50 | 47 | 45 |
| 534 | 134 | 129 | 124 | 119 | 114 | 3681 | 56 | 54 | 51 | 48 | 45 |

A13171

**15 SEER Heat Pump / Hybrid Dual Fuel Series Carrier, Bryant Series A, B 15 SEER Heat Pump ICP Series A**

| Required Subcooling °F(°C) | | | | | |
|---|---|---|---|---|---|
| Model Size | Outdoor Ambient Temperature °F(°C) | | | | |
| | 75 (24) | 85 (29) | 95 (35) | 105 (41) | 115 (46) |
| | | | | | |
| 024 | 12 (6.9) | 12 (6.9) | 12 (6.9) | 12(6.9) | 12 (6.9) |
| 030 | 13 (7.5) | 12 (6.9) | 12 (6.9) | 12(6.9) | 11 (6.5) |
| 036 | 17 (9.4) | 16 (8.8) | 16 (8.8) | 15 (8.2) | 15 (8.2) |
| 042 | 14 (7.8) | 14 (7.8) | 13 (7.5) | 13 (7.5) | 13 (7.5) |
| 048 | 15 (8.2) | 15 (8.2) | 15 (8.2) | 15 (8.2) | 14 (7.8) |
| 060 | 17 (9.4) | 16 (8.8) | 16 (8.8) | 15 (8.2) | 15 (8.2) |

NOTE: Subcooling values calculated using High Stage.

## Charging Procedure

1. Measure Discharge line pressure by attaching a gauge to the service port.
2. Measure the liquid line temperature by attaching a temperature sensing device to it.
3. Insulate the temperature sensing device so that the Outdoor Ambient doesn't affect the reading.
4. Refer to the required Subcooling in the table based on the model size and the Outdoor Ambient temperature.
5. Interpolate if the Outdoor ambient temperature lies in between the table values.
6. Find the Pressure Value in the table corresponding to the measured Pressure of the Compressor Discharge line.
7. Read across from the Pressure reading to obtain the liquid line temperature for a required Subcooling.
8. Add charge if the measured temperature is higher than the table value.
9. Remove charge if the measured temperature is lower than the table value.

50VR500263 REV. -

| Required Liquid Line Temperature for a Specific Subcooling (R-410A) | | | | | | | | | | | | | |
|---|---|---|---|---|---|---|---|---|---|---|---|---|---|
| Pressure (psig) | Required Subcooling (°F) | | | | | | Pressure (kPa) | Required Subcooling (°C) | | | | |
| | 5 | 10 | 15 | 20 | 25 | | | 3 | 6 | 8 | 11 | 14 |
| 189 | 61 | 56 | 51 | 46 | 41 | | 1303 | 16 | 13 | 11 | 8 | 5 |
| 196 | 63 | 58 | 53 | 48 | 43 | | 1351 | 17 | 15 | 12 | 9 | 6 |
| 203 | 66 | 61 | 56 | 51 | 46 | | 1399 | 19 | 16 | 13 | 10 | 8 |
| 210 | 68 | 63 | 58 | 53 | 48 | | 1448 | 20 | 17 | 14 | 11 | 9 |
| 217 | 70 | 65 | 60 | 55 | 50 | | 1496 | 21 | 18 | 15 | 13 | 10 |
| 224 | 72 | 67 | 62 | 57 | 52 | | 1544 | 22 | 19 | 16 | 14 | 11 |
| 231 | 74 | 69 | 64 | 59 | 54 | | 1593 | 23 | 20 | 18 | 15 | 12 |
| 238 | 76 | 71 | 66 | 61 | 56 | | 1641 | 24 | 21 | 19 | 16 | 13 |
| 245 | 77 | 72 | 67 | 62 | 57 | | 1689 | 25 | 22 | 20 | 17 | 14 |
| 252 | 79 | 74 | 69 | 64 | 59 | | 1737 | 26 | 23 | 21 | 18 | 15 |
| 260 | 81 | 76 | 71 | 66 | 61 | | 1792 | 27 | 25 | 22 | 19 | 16 |
| 268 | 83 | 78 | 73 | 68 | 63 | | 1848 | 29 | 26 | 23 | 20 | 17 |
| 276 | 85 | 80 | 75 | 70 | 65 | | 1903 | 30 | 27 | 24 | 21 | 19 |
| 284 | 87 | 82 | 77 | 72 | 67 | | 1958 | 31 | 28 | 25 | 22 | 20 |
| 292 | 89 | 84 | 79 | 74 | 69 | | 2013 | 32 | 29 | 26 | 23 | 21 |
| 300 | 91 | 86 | 81 | 76 | 71 | | 2068 | 33 | 30 | 27 | 24 | 22 |
| 309 | 93 | 88 | 83 | 78 | 73 | | 2130 | 34 | 31 | 28 | 26 | 23 |
| 318 | 95 | 90 | 85 | 80 | 75 | | 2192 | 35 | 32 | 29 | 27 | 24 |
| 327 | 97 | 92 | 87 | 82 | 77 | | 2254 | 36 | 33 | 31 | 28 | 25 |
| 336 | 99 | 94 | 89 | 84 | 79 | | 2316 | 37 | 34 | 32 | 29 | 26 |
| 345 | 101 | 96 | 91 | 86 | 81 | | 2378 | 38 | 35 | 33 | 30 | 27 |
| 354 | 103 | 98 | 93 | 88 | 83 | | 2440 | 39 | 36 | 34 | 31 | 28 |
| 364 | 105 | 100 | 95 | 90 | 85 | | 2509 | 40 | 38 | 35 | 32 | 29 |
| 374 | 107 | 102 | 97 | 92 | 87 | | 2578 | 41 | 39 | 36 | 33 | 30 |
| 384 | 108 | 103 | 98 | 93 | 88 | | 2647 | 42 | 40 | 37 | 34 | 31 |
| 394 | 110 | 105 | 100 | 95 | 90 | | 2716 | 44 | 41 | 38 | 35 | 32 |
| 404 | 112 | 107 | 102 | 97 | 92 | | 2785 | 45 | 42 | 39 | 36 | 33 |
| 414 | 114 | 109 | 104 | 99 | 94 | | 2854 | 46 | 43 | 40 | 37 | 34 |
| 424 | 116 | 111 | 106 | 101 | 96 | | 2923 | 47 | 44 | 41 | 38 | 35 |
| 434 | 118 | 113 | 108 | 103 | 98 | | 2992 | 48 | 45 | 42 | 39 | 36 |
| 444 | 119 | 114 | 109 | 104 | 99 | | 3061 | 48 | 46 | 43 | 40 | 37 |
| 454 | 121 | 116 | 111 | 106 | 101 | | 3130 | 49 | 47 | 44 | 41 | 38 |
| 464 | 123 | 118 | 113 | 108 | 103 | | 3199 | 50 | 48 | 45 | 42 | 39 |
| 474 | 124 | 119 | 114 | 109 | 104 | | 3268 | 51 | 48 | 46 | 43 | 40 |
| 484 | 126 | 121 | 116 | 111 | 106 | | 3337 | 52 | 49 | 47 | 44 | 41 |
| 494 | 127 | 122 | 117 | 112 | 107 | | 3406 | 53 | 50 | 47 | 45 | 42 |
| 504 | 129 | 124 | 119 | 114 | 109 | | 3475 | 54 | 51 | 48 | 46 | 43 |
| 514 | 131 | 126 | 121 | 116 | 111 | | 3544 | 55 | 52 | 49 | 46 | 44 |
| 524 | 132 | 127 | 122 | 117 | 112 | | 3612 | 56 | 53 | 50 | 47 | 45 |
| 534 | 134 | 129 | 124 | 119 | 114 | | 3681 | 56 | 54 | 51 | 48 | 45 |

A170012

**15 SEER Heat Pump / Hybrid Dual Fuel Series Carrier, Bryant Series C, 15 SEER Heat Pump ICP Series B**

## Sequence of Operation

FAN OPERATION

The FAN switch on the thermostat controls indoor fan operation. When the FAN switch is placed in the ON position, the indoor (evaporator) fan motor (IFM) is energized through the G terminal on the thermostat. The motor's internal logic then provides power to the indoor (evaporator) fan motor (IFM). The IFM will run continuously when the FAN switch is set to ON.

When the FAN switch is set to AUTO, the thermostat deenergizes the IFM (provided there is not a call for cooling). The contacts open and the IFM is deenergized. The IFM will be energized only when there is a call for cooling, in heat pump heating mode or if the unit is equipped with accessory electric heat, the indoor-fan motor will also run while the accessory electric heat is energized.

**NOTE:** Motors on this product are programmed for 60 second time delay on tap 1 and 30 second time delay on tap 2. There is no time delay on tap 3. The indoor fan will remain ON for the set time delay after G or W2 is de-energized.

COOLING OPERATION

With a call for cooling (Y), the compressor, outdoor fan, and indoor fan start immediately. When the cooling demand is met, Y de-energizes, shutting the compressor, indoor fan and the outdoor fan.

HEATING OPERATION

With a call for heating (Y), the compressor, outdoor fan, and indoor fan start immediately. If Y cannot satisfy the heating demand, the auxiliary or backup heat (W2) energizes. In case of staged heating, W3 is energized if the demand is not met. When heating demand is met, W3, W2 and Y sequentially de-energize shutting the compressor, indoor fan and the outdoor fan.

CONTINUOUS FAN

With the continuous indoor fan option selected on the thermostat, G is continuously energized. The continuous fan speed will be the same as the cooling fan speed.

DEFROST

Defrost board (DB) is a time and temperature control, which includes a field-selectable time period between checks for defrost (30, 60, 90 and 120 minutes). The time period is factory-set at 60 minutes and should only be adjusted by a trained service person. Electronic timer and defrost cycle start only when contactor is energized and defrost thermostat (DFT) is closed.

Defrost mode is identical to Cooling mode. The outdoor fan motor stops because of "OF1" and "OF2" contacts opening on the defrost board, a bank of optional electric heat turns on to warm air supplying the conditioned space.

ELECTRIC RESISTANCE HEATING

If accessory electric heaters are installed, on a call for "Emergency Heat" the thermostat energizes W which energizes the heater relay and in turn energizes the electric heaters. The IFM is energized which starts the indoor-fan motor. If the heaters are staged, W2 is energized when the second stage of heating is required. When the need for heating is satisfied, the heater and IFM are de-energized.

## ECM Fan Motor Troubleshooting

Caution – Do not disconnect motor plugs under load.

- Check the high-voltage supply to motor. The ECM fan motor will always have high voltage to the motor even when the motor is off. The 24 volt signal cycles the motor on and off. The motor can accept more than one 24 volt control signal to the different motor taps without damaging it. The motor will default to the highest speed tap that see a 24 volt signal.

Fan won't run...

- Cycle power off to the unit. Disconnect the two plugs going into the motor. One plug is the high voltage supply and the other is the low voltage control.
- Cycle power back on and measure the high voltage supply plug to determine if there is voltage at plug. If there is no voltage at plug, determine if there is power to the unit. The easiest place to measure the voltage is on the line side of the contactor. If there is voltage at the contactor and no voltage at the plug, cycle the power back off and inspect the wiring harness and plug for loose or broken connections.
- Replace the wiring harness and plug, if it is found to be defective.
- If there is power at the high voltage plug, check the low voltage control signal.
- With the power on to the unit, verify that there is 24volts between R and C in the low voltage control box. If there is not 24 volts at R and C check the inline 3 amp fuse. If the fuse is blown, check for shorted, bare or chaffed wires before installing another fuse in the holder. If the fuse is good make sure there is line voltage on the primary side of the transformer. Then check the secondary side of the transformer. If there is line voltage on the transformer primary and no voltage on the secondary; replace the transformer.
- If there is 24volts between R and C, jump R and G together in the low voltage control box. Check to see if there is a 24 volt signal at pins 1, 2 or 3 referenced to common (ground) at the motor's low voltage plug. If there is no voltage between common and one of the pins, trace the wires back to the low voltage control box.
- If there is power at the high voltage plug, voltage at pins 1, 2 or 3 on the low voltage plug, the connections are good between the plugs and motor and the motor is not running: replace the motor.

Two 24 volt signal wires will be connected from the thermostat to the low voltage control plug. One wire (signal) will be for constant fan (cooling) speed and the other will be for electric heat.

If there is an intermittent motor operation issue, check the 1000 ohm resistor between the green "G" wire and the brown "C" wire in the unit's wiring harness. (See unit's wiring diagram.) The resistor could be blown (open). This resistor is in line with the fan motor to provide a load for the thermostat's triacs, or relay.

## Time Delays

The unit/system time delays include:

- The air conditioning or heat pump units do not have any built in time delays to start the cooling or heating cycle. Most residential thermostats have an electronic safety start feature built into the software to prevent compressor short cycling.
- The indoor fan motor (ECM) has a built in fan off delays on the first two taps of the motor. The third motor tap will shut off immediately after the 24v signal is gone. See the following for details:
- Tap 1 - 60 second off delay
- Tap 2 - 30 second off delay
- Tap 3 - 0 second off delay
- The only other timing feature in the heat pump units are built into the defrost board. See defrost board sequence for more details on defrost time delays and setups.

## Pressure Switches

The R-410A air conditioner contains one pressure switch to prevent system operation of the pressures get excessively high. The high pressure switch opens at 650 psig and closes at 420 psig. The pressure switch setting is considerably higher than on comparably sized R-22 units. The high pressure switch can be identified by their pink stripe on the switch's electrical wires.

The R-410A heat pump contains a loss of charge switch in the liquid line which opens at 20 psig and closes at 45 psig. See troubleshooting section for sequence when a pressure switch trip occurs.

## Accumulator, Reversing Valve (RVS)

The R-410A heat pumps have a specifically designed reversing valve, for R-410A application and an accumulator for storing excess liquid refrigerant during the heating mode to prevent damaging flood-back.

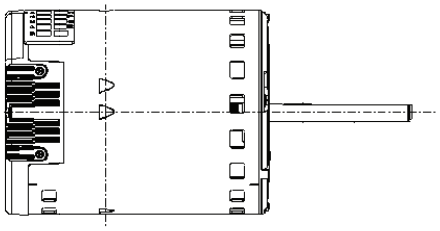

A10170

**Fig. 21 – ECM Motor**

A190227

**Fig. 22 – SelecTech® Motor**

SelecTech is a registered trademark of Nidec Motor Corporation

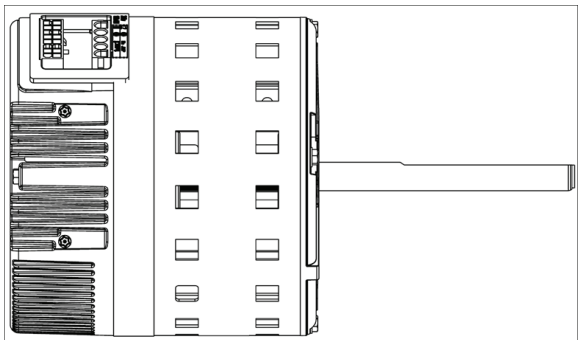

A180201

**Fig. 23 – EON™ Motor (Advanced Dehumidification Models)**

EON is a trademark of Regal Beloit.

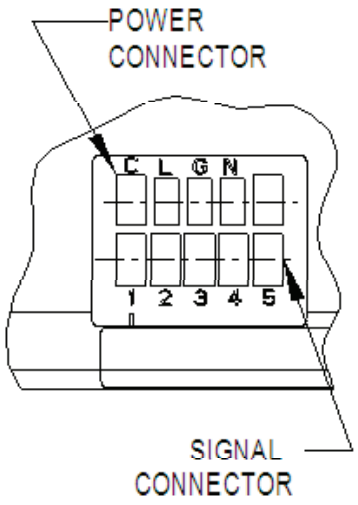


A10169

**Fig. 24 – Constant Torque Module Plug**

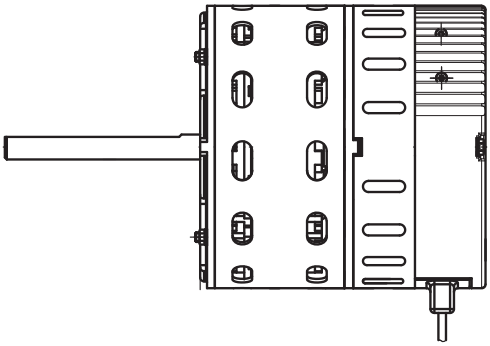

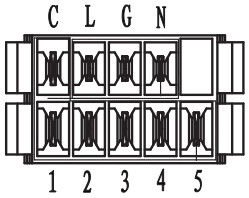


A150777

**Fig. 25 – Digi Motor Module Plug**

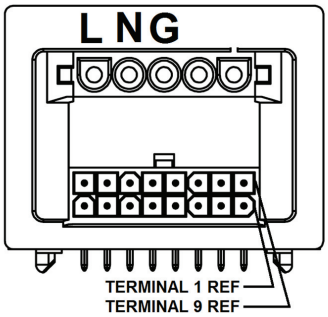


A180200

**Fig. 26 – EON™ Module Plug (Advanced Dehumidification Models)**

EON is a trademark of Regal Beloit.

## Control Box

### Contactor, Capacitor and Board

Removal of the front, right compressor/control panel will expose most of the unit's components. Both the air conditioner and heat pump control boxes will be in the upper right corner of the unit. There will be a contactor that cycles components off and on. The capacitor will assist the outdoor fan and compressor to operate. The heat pump models will have a circuit board to control the defrost cycle.

Always replace these devices with the Factory Approved Components.

### Incoming Power

Incoming power is attached to the two power wire stripped leads. A ground lug is also provided. Unit should always be grounded through the ground lug to the unit disconnect and from the disconnect to the electrical fuse box. Failure to do so can cause serious injury or death.

# Single Stage Gas Heat

## Start-up Heating and Make Adjustments

Complete the required procedures given in the Pre-Start-Up section before starting the unit. Do not jumper any safety devices when operating the unit. Make sure that burner orifices are properly aligned. Unstable operation my occur when the burner orifices in the manifold are misaligned.

Follow the lighting instructions on the heating section operation label (located on the inside of the control access panel) to start the heating section.

**NOTE:** Make sure that gas supply has been purged, and that all gas piping has been checked for leaks.

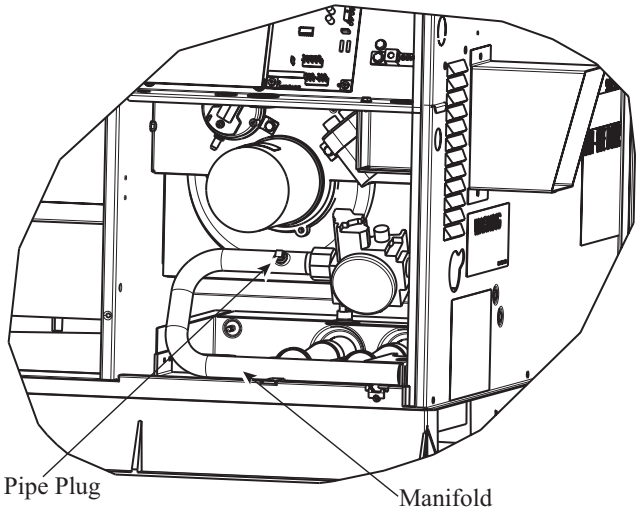


A07679

Standard and Low NOx Models

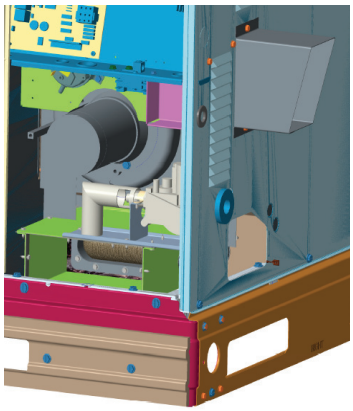

A180078

Ultra Low NOx Models

**Fig. 27 – Burner Assembly**

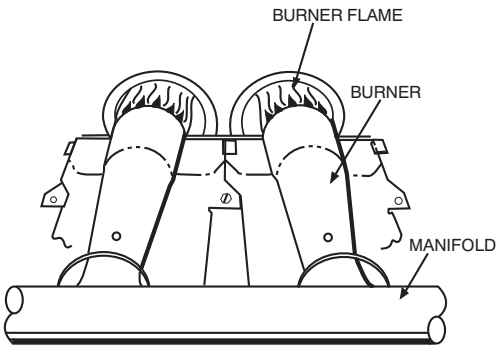


C99021

Standard and Low NOx Models

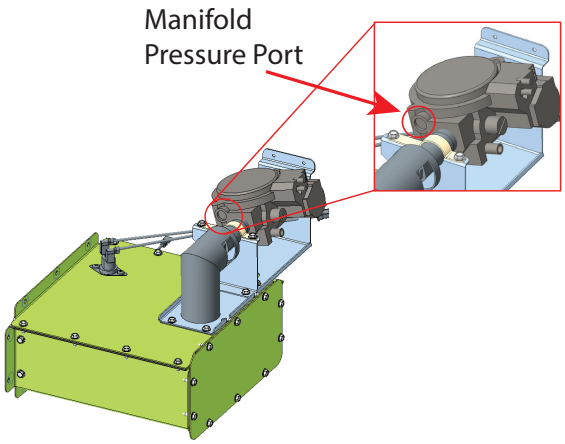


A200293

Ultra Low NOx Models

**Fig. 28 – Monoport Burner**

## Check Heating Control for Standard and Low NOx Onlyl

Start and check the unit for proper heating control operation as follows (see furnace lighting instructions located on the inside of the control access panel):

1. Place room thermostat SYSTEM switch in the HEAT position and the fan switch is placed in AUTO position.
2. Set the heating temperature control of the thermostat above room temperature.
3. The induced-draft motor will start.
4. On a call for heating, the main burner should light within 5 sec. of the spark being energized. If the burners do not light, there is a 22-sec. delay before another 5-sec. try. If the burners still do not light, this sequence is repeated. For 3-phase models if the burners do not light within 15 minutes from the initial call for heat, there is a lockout. For single phase models, if the burners do not light on the 4th ignition attempt, there is a lockout. To reset the control, break the 24-v power to W.
5. For 3-phase models the evaporator fan will turn on 45 sec. after the flame has been established. The evaporator fan will turn off 45 sec. after the thermostat has been satisfied. For single phase models the evaporator fan will turn on 30 sec. after the flame has been established. The evaporator fan will turn off 90 sec. After the thermostat has been satisfied. Please note that the integrated gas unit controller (IGC) has the capability to automatically reduce the evaporator “ON” delay and increase the evaporator “OFF” delay in the event of high duct static and/or partially-clogged filter.

## Check Heating Control Ultra Low NOx

Start and check the unit for proper heating control operation as follows (see furnace lighting instructions located on the inside of the control access panel):

1. Place room thermostat SYSTEM switch in the HEAT position and the fan switch is placed in AUTO position.
2. Set the heating temperature control of the thermostat above room temperature.
3. On a call for heating, the inducer motor will start up for a 30 second pre-purge.
4. The control will then chek to see the pressure switch closed. Then the main burner should light within 5 sec. of the spark being energized. If the burners do not light, there is a 22-sec. delay before another 5-sec. try. If the burners still do not light, this sequence is repeated. If the burners do not light on the 4th ignition attempt, there is a lockout. To reset the control, break the 24-v power to W.
5. The evaporator fan will turn on 30 sec. after the flame has been established. The evaporator fan will turn off 90 sec. after the thermostat has been satisfied. Please note that the integrated gas unit controller (IGC) has the capability to automatically reduce the evaporator “ON” delay and increase the evaporator “OFF” delay in the event of high duct static and/or partially-clogged filter.

## Check Gas Input

Check gas input and manifold pressure after unit start-up (See Table 11). If adjustment is required proceed as follows:

- The rated gas inputs shown in Table 11 are for altitudes from sea level to 2000 ft (610 m) above sea level. These inputs are based on natural gas with a heating value of 1025 Btu/ft$^3$ at 0.60 specific gravity, or propane gas with a heating value of 2500 Btu/ft$^3$ at 1.5 specific gravity.

**NOTE:** Ultra Low NOx is only available in natural gas only.

IN THE U.S.A.:

The input rating for altitudes above 2,000 ft (610 m) must be reduced by 4% for each 1,000 ft (305 m) above see level.

For installations below 2,000 ft (610 m), refer to the unit rating plate.

For installations above 2,000 ft (610 m). multiply the input on the rating plate by the derate multiplier in Table 8 for correct input rate. If the natural gas is not de-rated by the utility company refer to Table 12 or Table 13 for correct orifice sizes and manifold pressures.

**Table 8 – Altitude Derate Multiplier for U.S.A. (Standard and Standard Low NOx Models Only)***

| Altitude ft†(m) | Percent of Derate | Derate Multiplier Factor‡ |
|---|---|---|
| 0-2000 (0-610) | 0 | 1.00 |
| 2001-3000* (610-914) | 8-12 | 0.90 |
| 3001-4000 (915-1219) | 12-16 | 0.86 |
| 4001-5000 (1220-1524) | 16-20 | 0.82 |
| 5001-6000 (1524 -1829) | 20-24 | 0.78 |
| 6001-7000 (1829-2134) | 24-28 | 0.74 |
| 7001-8000 (2134-2438) | 28-32 | 0.70 |
| 8001-9000 (2439-2743) | 32-36 | 0.66 |
| 9001-10,000 (2744-3048) | 36-40 | 0.62 |

*. In Canada see Canadian Altitude Adjustment.
†. Ultra Low NOx only available 0-2000 ft
‡. Derate multiplier factors are based on midpoint altitude for altitude range.

IN CANADA:

The input rating for altitudes from 2,000 (610 m) to 4,500 ft (1372 m) above sea level must be derated 10% by an authorized Gas Conversion Station or Dealer.

EXAMPLE:

90,000 Btu/hr Input Furnace Installed at 4300 ft.

| Furnace Input Rate at Sea Level | | Derate Multiplier Factor | | Furnace Input Rate at Installation Altitude |
|---|---|---|---|---|
| 90,000 | X | 0.90 | = | 81,000 |

When the gas supply being used has a different heating value or specific gravity, refer to national and local codes, or contact your distributor to determine the required orifice size.

**⚠ CAUTION**

**UNIT DAMAGE HAZARD**

Failure to follow this caution may result in reduced unit and/or component life.

Do Not redrill an orifice. Improper drilling (burrs, out-of-round holes, etc.) can cause excessive burner noise and misdirection of burner flame. If orifice hole appears damaged or it is suspected to have been redrilled, check orifice hole with a numbered drill bit of correct size.

## Adjust Gas Input

The gas input to the unit is determined by measuring the gas flow at the meter or by measuring the manifold pressure. Measuring the gas flow at the meter is recommended for natural gas units. The manifold pressure must be measured to determine the input of propane gas units.

**Measure Gas Flow (Natural Gas Units)**

Minor adjustment to the gas flow can be made by changing the manifold pressure. The manifold pressure must be maintained between 3.2 and 3.8 IN. W.C.

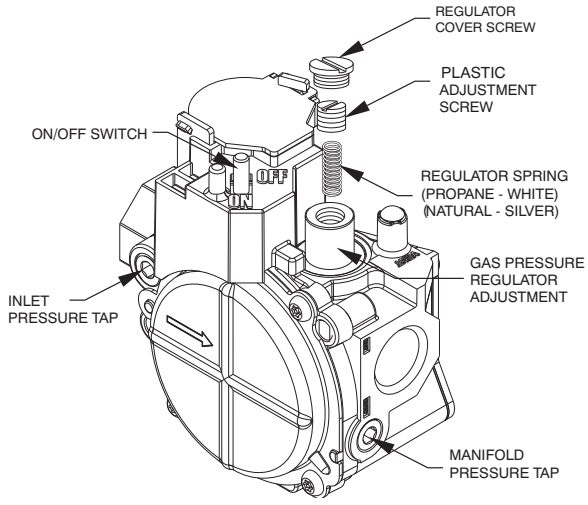


**Fig. 29 – Single-Stage Gas Valve**

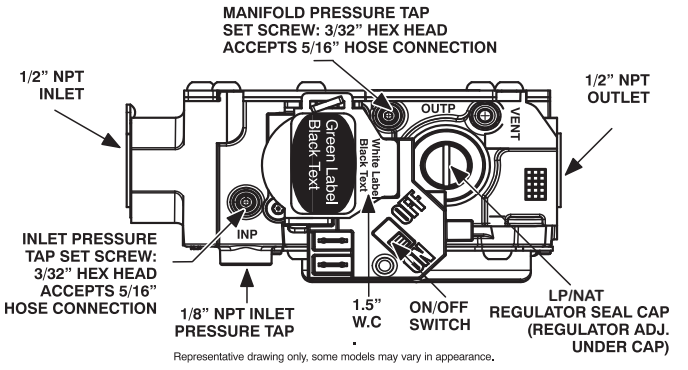


**Fig. 30 – Single-Stage Gas Valve with Tower Pressure Ports**

If larger adjustments are required, change main burner orifices following the recommendations of national and local codes.

**NOTE:** All other appliances that use the same meter must be turned off when gas flow is measured at the meter.

Proceed as follows:

1. Turn off gas supply to unit.
2. Manifold pressure connections
   a. For Standard and Low NOx models with standard gas valve, remove pipe plug from manifold using a wrench (see Fig. 27). Install barbed pressure tap and hose to connect to manometer. Turn on gas supply to unit.
   b. For Ultra Low NOx units with standard gas valve, remove manifold pressure tap cover using an allen wrench. (See Fig. 29.) Install barbed pressure tap and hose to connect to manometer. Turn on gas supply to unit.
   c. For gas valve with tower pressure ports, loosen set screw on manifold tower pressure tap no more than one full turn counter-clockwise with a 3/32-in. hex wrench. (see Fig. 30.) Connect manometer by sliding 5/16-in connecting hose over the manifold tower pressure port. Turn on gas supply to unit.
3. Record number of seconds for gas meter test dial to make one revolution.
4. Divide number of seconds in Step 3 into 3600 (number of seconds in one hr).
5. Multiply result of Step 4 by the number of cubic feet (cu ft) shown for one revolution of test dial to obtain cubic feet (cu ft) of gas flow per hour.
6. Multiply result of Step 5 by Btu heating value of gas to obtain total measured input in Btuh. Compare this value with heating input shown in Table 11 (Consult the local gas supplier if the heating value of gas is not known).

EXAMPLE: Assume that the size of test dial is 1 cu ft, one revolution takes 32 sec, and the heating value of the gas is 1050 Btu/$ft^3$. Proceed as follows:

1. 32 sec. to complete one revolution.
2. 3600 ÷ 32 = 112.5.
3. 112.5 x 1 =112.5 $ft^3$ of gas flow/hr.
4. 112.5 x 1050 = 118,125 Btuh input.

If the desired gas input is 115,000 Btuh, only a minor change in the manifold pressure is required.

Observe manifold pressure and proceed as follows to adjust gas input:

1. Remove regulator cover screw over plastic adjustment screw on gas valve (See Fig. 29 and Fig. 30).
2. Turn plastic adjustment screw clockwise to increase gas input, or turn plastic adjustment screw counterclockwise to decrease input (See Fig. 29 and Fig. 30). Manifold pressure must be between 3.2 and 3.8 IN. WC.

**NOTE:** Manifold pressure must be checked with the access door on.

**⚠ WARNING**

**FIRE AND UNIT DAMAGE HAZARD**

Failure to follow this warning could result in personal injury or death and/or property damage.

Unsafe operation of the unit may result if manifold pressure is outside this range.

3. Replace regulator cover screw on gas valve (See Fig. 29 and Fig. 30).
4. Turn off gas supply to unit.
5. Remove manometer from pressure tap
   a. For Standard and Low NOx models with standard gas valve, disconnect hose from barbed pressure tap. Disconnect barbed pressure tap from manifold using a wrench. Re-install pipe plug in manifold using a wrench (see Fig. 27). Turn on gas supply to unit.
   b. For Ultra Low NOx units with standard gas valve, remove manometer hose and barbed pressure tap. Replace pressure tap cover using allen wrench (See Fig. 27.)
   c. For gas valve with tower pressure port, remove connecting hose. Tighten set screw clockwise on manifold pressure port using a 3/32-in hex wrench. (See Fig. 30.)
6. Turn on gas to unit and check for leaks.

**Measure Manifold Pressure (Propane Units)**

Refer to propane kit installation instructions for properly checking gas input.

**Table 9 – High Altitude Compensation, Natural Gas - Single Phase Models**

| Nameplate Input (Btu/hr) | Rated Heating Input (Btu/hr), Natural Gas at Installation Altitude Above Sea Level, U.S.A.* | | | | |
|---|---|---|---|---|---|
| | 0 to 2000 ft (0-610 m) | 2001 to 3000 ft*† (611 to 914 m) | 3001 to 4000 ft† (915 to 1219 m) | 4001 to 5000 ft† (1220 to 1524 m) | 5001 to 6000 ft† (1524 to 1829 m) |
| 40000 | 40000 | 36000 | 34400 | 32800 | 31200 |
| 45000 | 45000 | - | - | - | - |
| 60000 | 60000 | 54000 | 51600 | 49200 | 46800 |
| 89000 | 89000 | - | - | - | - |
| 90000 | 90000 | 81000 | 77400 | 73800 | 70200 |
| 115000 | 115000 | 103500 | 98900 | 94300 | 89700 |
| 127000 | 127000 | 114300 | 109200 | 104100 | 99100 |

*. In the U.S.A., the input rating for altitudes above 2000 ft (610m) must be reduced by 4% for each 1000 ft (305 m) above sea level.
In Canada, the input rating for altitudes from 2001 to 4500 ft (611 to 1372 m) above sea level must be derated by 10% by an authorized gas conversion station or dealer.
For Canadian Installations from 2000 to 4500 ft (610-1372 m), use U.S.A. column 2001 to 3000 ft (611 to 914 m).
†. Ultra Low NOx is only available 0-2000 ft

**Table 10 – High Altitude Compensation, Natural Gas - Three Phase Models**

| Nameplate Input (Btu/hr) | Rated Heating Input (Btu/hr), Natural Gas at Installation Altitude Above Sea Level, U.S.A.* | | | | |
|---|---|---|---|---|---|
| | 0 to 2000 ft (0-610 m) | 2001 to 3000 ft*† (611 to 914 m) | 3001 to 4000 ft† (915 to 1219 m) | 4001 to 5000 ft† (1220 to 1524 m) | 5001 to 6000 ft† (1524 to 1829 m) |
| 40000 | 40000 | 36000 | 34400 | 32800 | 31200 |
| 60000 | 60000 | 54000 | 51600 | 49200 | 46800 |
| 89000 | 89000 | - | - | - | - |
| 90000 | 90000 | 81000 | 77400 | 73800 | 70200 |
| 115000 | 115000 | 103500 | 98900 | 94300 | 89700 |
| 130000 | 130000 | 117000 | 111800 | 106600 | 101400 |

*. In the U.S.A., the input rating for altitudes above 2000 ft (610m) must be reduced by 4% for each 1000 ft (305 m) above sea level.
In Canada, the input rating for altitudes from 2001 to 4500 ft (611 to 1372 m) above sea level must be derated by 10% by an authorized gas conversion station or dealer.
For Canadian Installations from 2000 to 4500 ft (610-1372 m), use U.S.A. column 2001 to 3000 ft (611 to 914 m).
†. Ultra Low NOx is only available 0-2000 ft

**Table 11 – Heating Inputs**

| Heating Input (BTUH) | Number of Orifices | Gas Supply Pressure (IN. W.C.) | | | | Manifold Pressure (IN. W.C.) | |
|---|---|---|---|---|---|---|---|
| | | Natural* | | Propane*† | | | |
| | | Min | Max | Min | Max | Natural* | Propane*† |
| 40,000 | 2 | 4.0 | 13.0 | 11.0 | 13.0 | 3.2~3.8 | 10.0~11.0 |
| 60,000 | 3 | 4.0 | 13.0 | 11.0 | 13.0 | 3.2~3.8 | 10.0~11.0 |
| 90,000 | 3 | 4.5 | 13.0 | 11.0 | 13.0 | 3.2~3.8 | 10.0~11.0 |
| 115,000 | 3 | 4.5 | 13.0 | 11.0 | 13.0 | 3.2~3.8 | 10.0~11.0 |
| 130,000 | 3 | 4.5 | 13.0 | 11.0 | 13.0 | 3.2~3.8 | 10.0~11.0 |
| **Ultra Low NOx** | | | | | | | |
| 45,000 | 1 | 5.0 | 13.0 | N/A | N/A | 3.2~3.8 | N/A |
| 60,000 | 1 | 4.0 | 13.0 | N/A | N/A | 3.2~3.8 | N/A |
| 89,000 | 1 | 4.5 | 13.0 | N/A | N/A | 3.2~3.8 | N/A |

*. Based on altitudes from sea level to 2000 ft (610 m) above sea level. In U.S.A. for altitudes above 2000 ft (610 m), reduce input rating 4 percent for each additional 1000 ft (305 m) above sea level. In Canada, from 2000 ft (610 m) above sea level to 4500 ft (1372 m) above sea level, derate the unit 10 percent.
†. When a unit is converted to propane, different size orifices must be used. See separate, natural-to-propane conversion kit instructions.

**Table 12 – Natural Gas Orifice Sizes and Manifold Pressure (Single Phase Models)**

| Nameplate Input, High Stage (Btu/hr) | | Altitude of Installation (Ft. Above Sea Level) U.S.A.* | | | | |
|---|---|---|---|---|---|---|
| | | 0 to 2000 | 2001 to 3000*† | 3001 to 4000† | 4001 to 5000† | 5001 to 6000† |
| 40000 | Orifice No. (Qty) | 44 (2) | 45 (2)‡ | 48 (2)‡ | 48 (2)‡ | 48 (2)‡ |
| | Manifold Press. | 3.2 | 3.2 | 3.8 | 3.5 | 3.2 |
| 60000 | Orifice No. (Qty) | 44 (3) | 45 (3)‡ | 48 (3)‡ | 48 (3)‡ | 48 (3)‡ |
| | Manifold Press. | 3.2 | 3.2 | 3.8 | 3.5 | 3.2 |
| 90000 | Orifice No. (Qty) | 38 (3) | 41 (3)‡ | 41 (3)‡ | 42 (3)‡ | 42 (3)‡ |
| | Manifold Press. | 3.6 | 3.8 | 3.4 | 3.4 | 3.2 |
| 115000 | Orifice No. (Qty) | 33 (3) | 36 (3)‡ | 36 (3)‡ | 36 (3)‡ | 38 (3)‡ |
| | Manifold Press. | 3.8 | 3.8 | 3.6 | 3.3 | 3.6 |
| 127000 | Orifice No. (Qty) | 31 (3) | 31 (3) | 33 (3)‡ | 33 (3)‡ | 34 (3)‡ |
| | Manifold Press. | 3.8 | 3.2 | 3.7 | 3.4 | 3.3 |
| **Ultra Low NOx** | | | | | | |
| 45000 | Orifice No. (Qty) | .125 (1) | - | - | - | - |
| | Manifold Press. | 3.2~3.8 | - | - | - | - |
| 60000 | Orifice No. (Qty) | 28 (1) | - | - | - | - |
| | Manifold Press. | 3.2~3.8 | - | - | - | - |
| 89000 | Orifice No. (Qty) | 18 (1) | - | - | - | - |
| | Manifold Press. | 3.2~3.8 | - | - | - | - |

*. In the U.S.A., the input rating for altitudes above 2000 ft (610m) must be reduced by 4% for each 1000 ft (305 m) above sea level.
In Canada, the input rating for altitudes from 2001 to 4500 ft (611 to 1372 m) above sea level must be derated by 10% by an authorized gas conversion station or dealer.
For Canadian Installations from 2000 to 4500 ft, use U.S.A. column 2001 to 3000 ft (610 to 914 m).
†. Ultra Low NOx is only available 0-2000 ft
‡. Orifices available through your distributor.
**NOTE**: Orifice sizes and manifold pressure settings are based on natural gas with a heating value of 1025 Btu/ft$^3$ and a specific gravity of .6.

**Table 13 – Natural Gas Orifice Sizes and Manifold Pressure (Three Phase Models)**

| Nameplate Input, High Stage (Btu/hr) | | Altitude of Installation (Ft. Above Sea Level) U.S.A.* | | | | |
|---|---|---|---|---|---|---|
| | | 0 to 2000 | 2001 to 3000*† | 3001 to 4000† | 4001 to 5000† | 5001 to 6000† |
| 40000 | Orifice No. (Qty) | 44 (2) | 45 (2)‡ | 48 (2)‡ | 48 (2)‡ | 48 (2)‡ |
| | Manifold Press. | 3.2 | 3.2 | 3.8 | 3.5 | 3.2 |
| 60000 | Orifice No. (Qty) | 38 (2) | 41 (2)‡ | 41 (2)‡ | 42 (2)‡ | 42 (2)‡ |
| | Manifold Press. | 3.6 | 3.8 | 3.4 | 3.4 | 3.2 |
| 90000 | Orifice No. (Qty) | 38 (3) | 41 (3)† | 41 (3)† | 42 (3)† | 42 (3)† |
| | Manifold Press. | 3.6 | 3.8 | 3.4 | 3.4 | 3.2 |
| 115000 | Orifice No. (Qty) | 33 (3) | 36 (3)† | 36 (3)† | 36 (3)† | 38 (3)† |
| | Manifold Press. | 3.8 | 3.8 | 3.6 | 3.3 | 3.6 |
| 130,000 | Orifice No. (Qty) | 31 (3) | 31 (3) | 33 (3)‡ | 33 (3)‡ | 34 (3)‡ |
| | Manifold Press. | 3.8 | 3.2 | 3.7 | 3.4 | 3.3 |
| **Ultra Low NOx** | | | | | | |
| 60000 | Orifice No. (Qty) | 28 (1) | - | - | - | - |
| | Manifold Press. | 3.2~3.8 | - | - | - | - |
| 89000 | Orifice No. (Qty) | 18 (1) | - | - | - | - |
| | Manifold Press. | 3.2~3.8 | - | - | - | - |

*. In the U.S.A., the input rating for altitudes above 2000 ft (610m) must be reduced by 4% for each 1000 ft (305 m) above sea level.
In Canada, the input rating for altitudes from 2001 to 4500 ft (611 to 1372 m) above sea level must be derated by 10% by an authorized gas conversion station or dealer.
For Canadian Installations from 2000 to 4500 ft, use U.S.A. column 2001 to 3000 ft (610 to 914 m)
†. Ultra Low NOx is only available 0-2000 ft
‡. Orifices available through your distributor.
NOTE: Orifice sizes and manifold pressure settings are based on natural gas with a heating value of 1025 Btu/ft$^3$ and a specific gravity of .6.

**NOTE:** For installations below 2,000 ft (610 m), refer to the unit rating plate for proper propane conversion kit. For installations above 2,000 ft (610 m), contact your distributor for proper propane conversion kit.

## Check Burner Flame

With control access panel (see Fig. 42) removed, observe the unit heating operation. Watch the burner flames to see if they are light blue and soft in appearance, and that the flames are approximately the same for each burner. Propane will have blue flame (See Fig. 28). Refer to the Maintenance section for information on burner removal. The burner flame on Ultra Low NOx models can't be checked. Ultra Low NOx models are not allowed to be converted to propane.

## Normal Operation

An LED (light-emitting diode) indicator is provided on the integrated gas unit controller (IGC) to monitor operation. The IGC is located by removing the control access panel (see Fig. 42). During normal operation, the LED is continuously on (See Table 14 for error codes).

## Heating Sequence of Operation (Single Phase Standard and Standard Low NOx Models Only)

On a call for heating, terminal W of the thermostat is energized, starting the induced-draft motor for a 5 second pre-purge. When the pressure switch senses that the induced-draft motor is moving sufficient combustion air, the burner sequence begins. This function is controlled by the integrated gas unit controller (IGC). The indoor (evaporator) –fan motor is energized 30 seconds after flame is established. When the thermostat is satisfied and W is de-energized, the burners stop firing and the indoor (evaporator) fan motor shuts off after a 90 second time-off delay. Please note that the IGC has the capability to automatically reduce the indoor fan motor on delay and increase the indoor fan motor off delay in the event of high duct static and/or a partially-clogged filter.

## Heating Sequence of Operation (3 Phase Standard and Standard Low NOx Models Only)

On a call for heating, terminal W of the thermostat is energized, starting the induced-draft motor. When the pressure switch senses that the induced-draft motor is moving sufficient combustion air, the burner sequence begins. This function is performed by the integrated gas unit controller (IGC). The indoor (evaporator)-fan motor is energized 45 sec after flame is established. When the thermostat is satisfied and W is de-energized, the burners stop firing and the indoor (evaporator) fan motor shuts off after a 45-sec time-off delay. Please note that the IGC has the capability to automatically reduce the indoor fan motor on delay and increase the indoor fan motor off delay in the event of high duct static and/or partially-clogged filter.

## Heating Sequence of Operation (Ultra Low NOx Single and Three Phase Models)

On a call for heating, terminal W of the thermostat is energized, starting the induced-draft motor for a 30 second pre-purge at normal ignition speed. When the pressure switch senses that the induced-draft motor is moving sufficient combustion air, the burner sequence begins. This function is controlled by the integrated gas unit controller (IGC).

After 30 sec of pre-purge is complete, the pressure switch checks for sufficient combustion. Then, the gas valve energizes and the system attempts to ignite with igniter being energized. The igniter energizes for 5 sec and integrated gas controller (IGC) allows system to sense flame for 2 sec at the end of 5 sec of ignition trial. On first successful ignition, system stays at the ignition speed for 10 sec and ramps up to an intermediate speed for approximately 10 sec and gradually ramps up to the steady state speed. The system uses the same logic for 2nd and 3rd ignition trials. In case the 4th attempt fails, the system will lock out for 1 hr. After 1 hr. lock out period, the system starts with normal operating sequence. Once flame is established and proven successfully, indoor (evaporator) fan motor is energized after 30 seconds. When the thermostat is satisfied and W is de-energized, the pre-mix burner will stop firing and the indoor (evaporator) fan motor shuts off after a 90 second time-off delay. Please note that the IGC has the capability to automatically decrease the indoor (evaporator) fan motor "ON" delay and increase the indoor (evaporator) fan motor "OFF" delay in the event of high duct static and/or partially-clogged filter.

If the time between heating calls is 5 minutes or less, subsequent ignitions will be conducted with the inducer on the intermediate inducer speed. If the time between heating calls is 5 minutes or more, the first two ignition attempts will be on the low inducer speed, while the 3rd and 4th attempts (if needed) would be on intermediate inducer speed.

## Limit Switches

Normally closed limit switch (LS) completes the control circuit. Should the leaving-air temperature rise above the maximum allowable temperature, the limit switch opens and the control circuit "breaks." Any interruption in the control circuit instantly closes the gas valve and stops gas flow to the burners. The blower motor continues to run until LS resets.

When the air temperature at the limit switch drops to the low-temperature setting of the limit switch, the switch closes and

completes the control circuit. The direct-spark ignition system cycles and the unit returns to normal heating operation.

**Table 14 – LED Indications**

| Status Code | LED Indication |
|---|---|
| Normal Operation* | On |
| No Power or Hardware Failure | Off |
| Check fuse, low voltage circuit | 1 Flash |
| Limit Switch Fault | 2 Flashes |
| Flame Sense Fault | 3 Flashes |
| Four Consecutive Limit Switch Faults | 4 Flashes |
| Ignition Lockout Fault | 5 Flashes |
| Pressure Switch Fault | 6 Flashes |
| Rollout Switch Fault | 7 Flashes |
| Burner Thermal Switch Fault (Ultra Low NOx) | 7 Flashes |
| Internal Control Fault | 8 Flashes |
| Temporary 1 hr auto reset† | 9 Flashes |

*. LED indicates acceptable operation. Do not change ignition control board.
†. This code indicates an internal processor fault that will reset itself in one hr. Fault can be caused by stray RF signals in the structure or nearby. This is a UL requirement.

NOTES:
When W is energized the burners will remain on for a minimum of 60 sec.
If more than one error code exists they will be displayed on the LED in sequence.

## Burner Thermal Switch (Ultra Low NOx)

The Burner Thermal Switch (BTS) is used on ULN units and is located on the top of the burner box. This switch functions the same as the rollout with the same Fault Code (7 flashes) on the IGC board.

## Rollout Switch

The function of the rollout switch is to close the main gas valve in the event of flame rollout. The switch is located above the main burners. When the temperature at the rollout switch reaches the maximum allowable temperature, the control circuit trips, closing the gas valve and stopping gas flow to the burners. The indoor (evaporator) fan motor (IFM) and induced draft motor continue to run until switch is reset. The IGC LED will display FAULT CODE 7.

## Gas Heating Fan Speed Set-up (Single Phase Models and Ultra Low NOx 3 Phase):

To change the gas heating speed:

1. Remove existing speed tap wire from the “HEAT” terminal on the IGC.
2. Connect the desired speed tap wire on the “HEAT” terminal on the IGC board. Make sure that the speed chosen delivers temperature rise within the rise range listed on the unit.

## Gas Heating Fan Speed Set-up (3 Phase Standard and Standard Low NOx Models)

To change the gas heating speed:

1. Remove the vinyl cap off of the desired speed tap wire. Installation Instructions show the temperature rise associated with each fan speed for a given static pressure. Make sure that the speed chosen delivers a temperature rise within the rise range listed on the unit rating plate.
2. Remove the current speed tap wire from the “GAS HEAT” terminal on the interface fan board (IFB) (see Fig. 18) and place vinyl cap over the connector on the wire.
3. Connect the desired speed tap wire to the “GAS HEAT” terminal on the interface fan board (IFB).

## Induced Draft (combustion air) Blower Assembly

The induced-draft blower assembly consists of the inducer motor, the blower housing, and the induced-draft blower wheel.

Clean the inducer wheel periodically to assure proper airflow and heating efficiency. Inspect blower wheel every fall before the heating season.

To inspect blower wheel:

1. Shut off power to the unit and close the manual shut off valve on the gas supply line to the unit.
2. Remove 2 screws holding the flue hood (Fig. 31) and remove the flue hood.
3. Remove flue baffle using a 5/16-in. ratchet to remove the 2 screws, being careful not to drop the 2 screws into the inducer housing.
4. Wearing gloves, inspect the inducer wheel blades for cleanliness by slowly spinning the wheel down using a screwdriver and observing with a flashlight. If debris is evident on the blades, take a small vacuum hose to the blades. Once you have cleaned 40 blades, the process is complete.
5. Re-connect the flue baffle using the 2 screws and 5/16-in. ratchet, being careful not to drop the screws into the housing.
6. Re-connect flue hood (Fig. 31) using the 2 screws removed.
7. Turn power back onto unit and open gas supply shutoff valve.

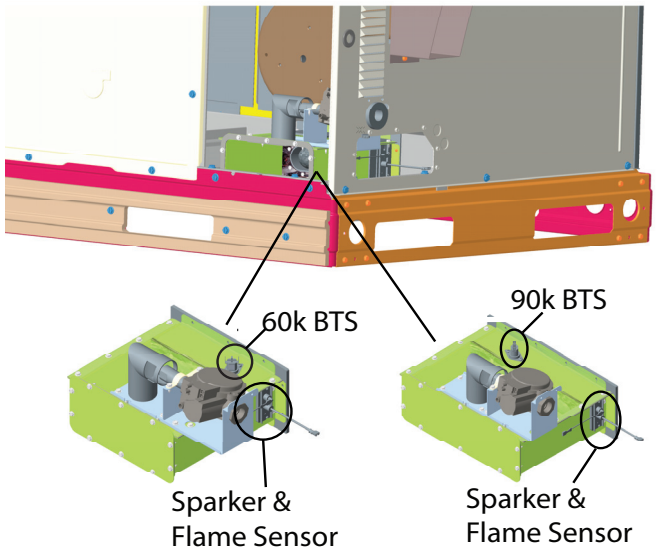


**Fig. 31 – Burner Thermal Switch (BTS) (Ultra Low NOx)** A200287

## Inducer Draft Blower Assembly Removal

1. Turn off gas supply and disconnect gas line from unit, allow 3 minutes cool-down.
2. Turn off electrical power to unit and disconnect high and low voltage connections to the unit lockout tagout unit.
3. Remove front access panel.
4. Disconnect gas supply pipe from gas valve.
5. Remove flue hood.
6. Remove right side panel of unit (heat exchanger side).

Do these steps first to avoid shavings entering new inducer assembly motor.

7. Disconnect Pressure Tap Hose from the inducer assembly.
8. Disconnect Inducer Motor plug connector from the harness.
9. For all units (except Ultra Low NOx [ULN] units) Remove mounting screw from gas manifold and pull Burner Assembly forward to clear Heat Shield (See Fig. 32). ULN units must not have the burner box removed from the heat exchanger panel.

A210076

**Fig. 32 – Removing Mounting Screw from Gas Manifold**

10. Disconnect Rollout Switch or BTS (BTS is ULN units only) switch quick connects.
11. Disconnect flame sensor quick connect and sparker quick connect. Note that the quick connects for ULN are not near the sparker and flame sensor brackets.
12. Disconnect quick connect plugs from Gas Valve.
13. Remove 2 screws from behind Heat Shield and 1 screw under control board panel (Fig. 33 and Fig. 34).

A210077

**Fig. 33 – Removing Screws Behind Heat Shield**

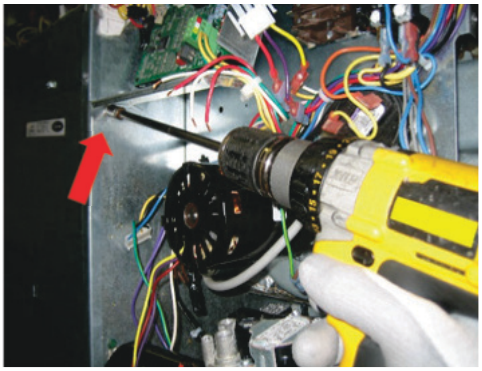

A210078

**Fig. 34 – Removing Screw Under Control Board Panel**

14. Gently pull Heat Shield / Control Panel bracket down and forward. Then rotate control panel bracket to the left. Secure assembly to screw hole on front panel with wire tie or similar fastener (Fig. 35).

Use caution when moving control panel to avoid damage to controls or wire harness while moving assembly.

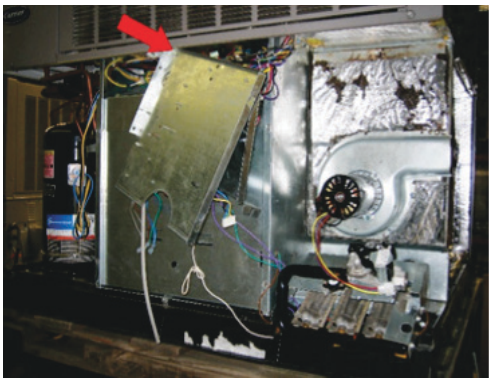

A210079

**Fig. 35 – Securing Assembly to Screw Hole**

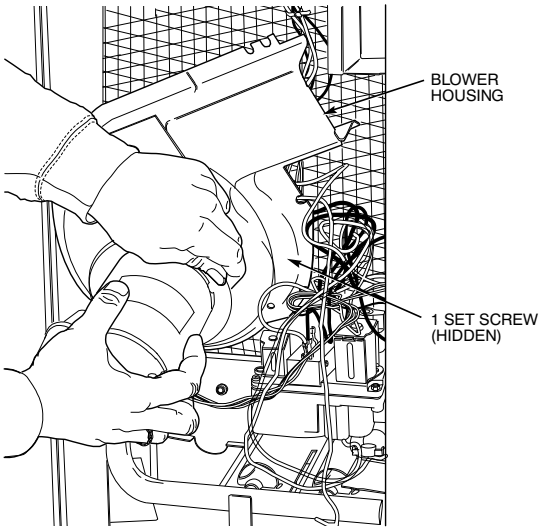


A200292

**Fig. 36 – Removing Inducer Assembly**

15. Remove 5 screws holding Inducer Assembly (see Fig. 36) and remove assembly.
16. At this point flue passages and the inducer assembly may be inspected by following the procedure in the Flue Gas Passageways section. The first pass of the firing tube flue passages can't be inspected on ULN units.
17. Re-install inducer assembly with 5 screws from step 15 insuring that insulated foil blanket is properly located behind new housing.

18. Reinstall Heat shield / Control Panel using caution to not pinch wires or damage the circuit board.
19. Replace quick connects connectors to Rollout Switch or BTS switch and Gas Valve.
20. Reconnect quick connects to sparker and flame sensor.
21. Reconnect pressure tap hose to inducer assembly.
22. Check all connections.
23. Replace right side panel (Fig. 37.)
24. Reconnect gas supply piping to gas valve.
25. Replace flue hood.

A210081

**Fig. 37 – Replacing Right Side Panel**

26. Reconnect gas supply and check for leaks using soap solution.
27. Reconnect high and low voltage connections to the unit.
28. Reset power and gas.
29. Test unit, recycle unit and check for proper operation.
30. Replace front access panel.

## Flue Gas Passageways

To inspect the flue collector box and upper areas of the heat exchanger:

1. Remove the induced draft blower assembly according to directions in the Induced Draft Blower Assembly section.
2. Remove the 11 screws holding the flue collector box cover (See Fig. 41) to the heat exchanger assembly. Inspect the heat exchangers.
3. Clean all surfaces, as required, using a wire brush.

## Limit Switch

Remove blower access panel (see Fig. 42). Limit switch is located on the fan partition.

## Burner Ignition

Unit is equipped with a direct spark ignition 100 percent lockout system. Ignition module (IGC) is located in the control box (See Fig. 41). Module contains a self-diagnostic LED. During servicing, refer to label diagram or Table 14 in these instructions for LED interpretation.

If lockout occurs, unit may be reset by either momentarily interrupting power supply to unit or by turning selector switch to OFF position at the thermostat.

**NOTE: For Ultra Low NOx** The combined flame sensor/sparker is located on the right side of the burner box. The flame sensor/sparker is accessible for service by removing the cover in the right side panel. The burner thermal switch (BTS) is located on the top of the burner box. For 60k heat sizes, the BTS switch is accessible through the cover in the right side panel. For 90k heat sizes, the BTS switch is accessible by removing the control access panel.

## Main Burners (Standard and Standard Low NOx Models Only

At the beginning of each heating season, inspect for deterioration or blockage due to corrosion or other causes. Observe the main burner flames and adjust, if necessary.

Removal of Gas Train

To remove the gas train for servicing:

1. Shut off main gas valve.
2. Shut off power to unit and install lockout tag.
3. Remove control access panel (See Fig. 42).
4. Disconnect gas piping at unit gas valve.
5. Remove fan partition mounting bracket (2 screws located on the left side of control compartment on the fan partition panel). Slide bracket forward, bottom first, to remove. (See Fig. 41.)
6. Remove wires connected to gas valve. Mark each wire.
7. Remove the mounting screw that attaches the burner rack to the unit base (See Fig. 41).
8. Partially slide the burner rack out of the unit (see Fig. 41 and Fig. 44). Remove ignitor and sensor wires at the burner assembly. Remove wires to rollout switch.
9. Slide the burner rack out of the unit (See Fig. 41 and Fig. 44).
10. To reinstall, reverse the procedure outlined above.
11. Check all connections for leaks.

**⚠ WARNING**

**FIRE, EXPLOSION HAZARD**

Failure to follow this warning could result in personal injury, death or property damage.

Do not purge gas supply into the combustion chamber. Do not use a match or other open flame to check for gas leaks.

Use a commercially available soap solution made specifically for the detection of leaks to check all connections. A fire or explosion may result causing property damage, personal injury or loss of life.

## Ultra Low NOx Burner Baffle Inspection/Cleaning (See Fig. 38.)

If the inlet side of the burner is required to be inspected and cleaned for trouble shooting, the design allow accessing the burner without removing the burner box from the heat exchanger assembly. This can be done by removing the screws from the front cover of the burner box and losing the screws on each side of the top cover to allow easy removal of baffle from the burner box. Once the baffle is removed the inlet side of the burner can be accessed and cleaned.

**NOTE:** This is NOT recommended to perform on yearly maintenance inspections, only allowed for trouble shooting the burner box assembly for any blockage.

**NOTE: Burner/heat exchanger assembly**

Due to the design, and to prevent damage to components, this is considered as one assembly and cannot be disassembled. This assembly is available to order though Replacement Components.

**⚠ WARNING**

**FIRE, EXPLOSION HAZARD**

Failure to follow this warning could result in personal injury, death or property damage.

Do not purge gas supply into the combustion chamber. Do not use a match or other open flame to check for gas leaks.

Use a commercially available soap solution made specifically for the detection of leaks to check all connections. A fire or explosion may result causing property damage, personal injury or loss of life.

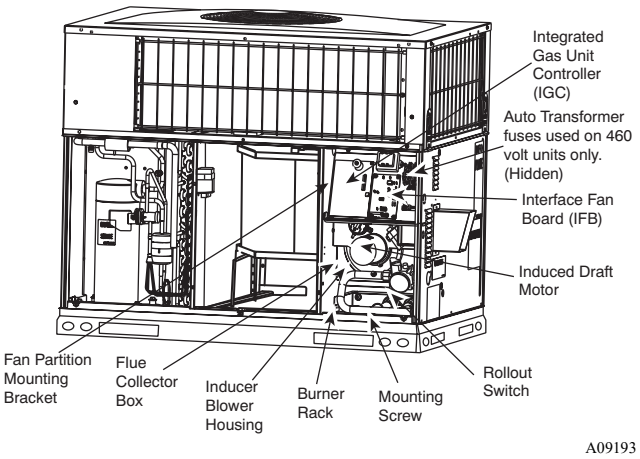


Standard and Standard Low NOx

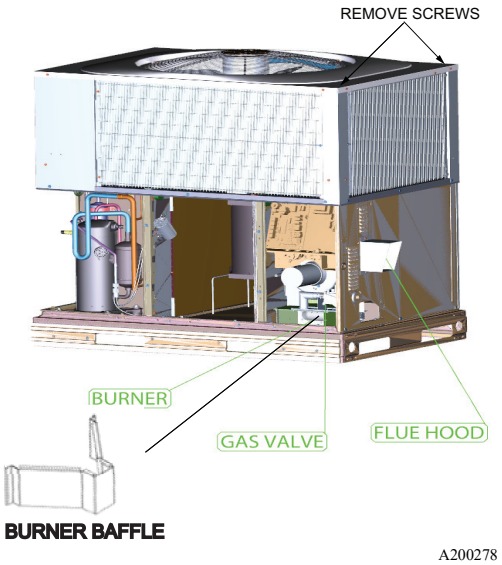


Ultra Low NOx

**Fig. 38 – Blower Housing and Flue Collector Box**

# Two-Stage Gas Heat

## Start-up Gas Heating and Make Adjustments

Complete the required procedures given in the Pre-Start-Up section before starting the unit. Do not jumper any safety devices when operating the unit. Make sure that burner orifices are properly aligned. Unstable operation my occur when the burner orifices in the manifold are misaligned.

Follow the lighting instructions on the heating section operation label (located on the inside of the control access panel) to start the heating section.

**NOTE:** Make sure that gas supply has been purged, and that all gas piping has been checked for leaks.

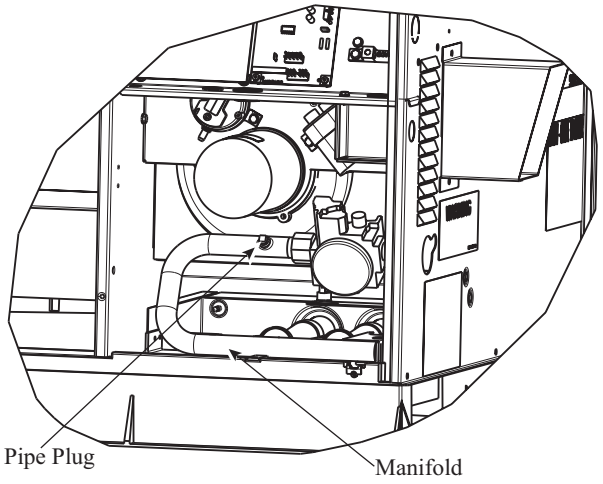


A07679

**Fig. 39 – Burner Assembly**

IN THE U.S.A.:

The input rating for altitudes above 2,000 ft (610 m) must be reduced by 4% for each 1,000 ft (305 m) above see level.

For installations below 2,000 ft (610 m), refer to the unit rating plate.

For installations above 2,000 ft (610 m) multiply the input on the rating plate by the derate multiplier in Table 8 for correct input rate. If the natural gas is not de-rated by the utility company refer to Table 16 for correct orifice sizes and manifold pressures.

IN CANADA:

**Table 15 – Altitude Derate Multiplier for U.S.A.***

| Altitude ft (m) | Percent of Derate | Derate Multiplier Factor† |
|---|---|---|
| 0-2000 (0-610) | 0 | 1.00 |
| 2001-3000* (610-914) | 8-12 | 0.90 |
| 3001-4000 (915-1219) | 12-16 | 0.86 |
| 4001-5000 (1220-1524) | 16-20 | 0.82 |
| 5001-6000 (1524 -1829) | 20-24 | 0.78 |
| 6001-7000 (1829-2134) | 24-28 | 0.74 |
| 7001-8000 (2134-2438) | 28-32 | 0.70 |
| 8001-9000 (2439-2743) | 32-36 | 0.66 |
| 9001-10,000 (2744-3048) | 36-40 | 0.62 |

*. In Canada see Canadian Altitude Adjustment.
†. Derate multiplier factors are based on midpoint altitude for altitude range.

The input rating for altitudes from 2,000 (610 m) to 4,500 ft (1372 m) above sea level must be derated 10% by an authorized Gas Conversion Station or Dealer.

EXAMPLE:

90,000 Btu/hr Input Furnace Installed at 4300 ft.

| Furnace Input Rate at Sea Level | | Derate Multiplier Factor | | Furnace Input Rate at Installation Altitude |
|---|---|---|---|---|
| 90,000 | X | 0.90 | = | 81,000 |

When the gas supply being used has a different heating value or specific gravity, refer to national and local codes, or contact your distributor to determine the required orifice size.

**⚠ CAUTION**

**UNIT DAMAGE HAZARD**

Failure to follow this caution may result in reduced unit and/or component life.

**Do Not** redrill an orifice. Improper drilling (burrs, out-of-round holes, etc.) can cause excessive burner noise and misdirection of burner flame. If orifice hole appears damaged or it is suspected to have been redrilled, check orifice hole with a numbered drill bit of correct size.

## Adjust Gas Input

The gas input to the unit is determined by measuring the gas flow at the meter or by measuring the manifold pressure. Measuring the gas flow at the meter is recommended for natural gas units. The manifold pressure must be measured to determine the input of propane gas units.

**Measure Gas Flow (Natural Gas Units)**

Minor adjustment to the gas flow can be made by changing the manifold pressure(s). The manifold pressure(s) must be maintained between 3.2 and 3.8 IN. W.C. for high stage and between 1.4 and 2.0 IN. W.C. for low stage (208/230 VAC models). For 460 VAC models, manifold pressure must be maintained between 3.2 and 3.8 IN. W.C.

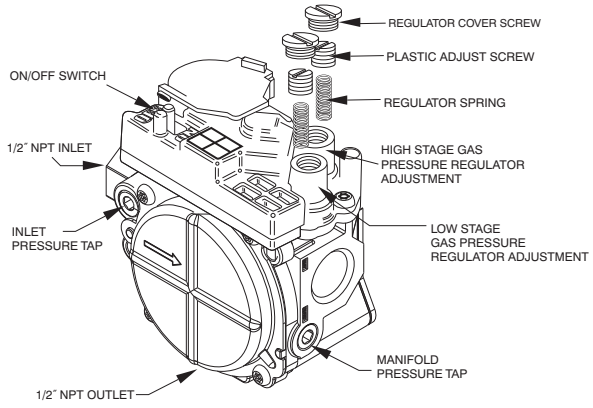


A04167

**Fig. 40 – Two-Stage Gas Valve (208/230 VAC Models)**

If larger adjustments are required, change main burner orifices following the recommendations of national and local codes.

**NOTE:** All other appliances that use the same meter must be turned off when gas flow is measured at the meter.

Proceed as follows:

1. Turn off gas supply to unit.
2. Remove pipe plug on manifold (See Fig. 27) and connect manometer. Turn on gas supply to unit.
3. Record number of seconds for gas meter test dial to make one revolution.

4. Divide number of seconds in Step 3 into 3600 (number of seconds in one hr).
5. Multiply result of Step 4 by the number of cubic feet (cu ft) shown for one revolution of test dial to obtain cubic feet (cu ft) of gas flow per hour.
6. Multiply result of Step 5 by Btu heating value of gas to obtain total measured input in Btuh. Compare this value with heating input shown in Table 17 (Consult the local gas supplier if the heating value of gas is not known).

EXAMPLE: Assume that the size of test dial is 1 cu ft, one revolution takes 32 sec and the heating value of the gas is 1050 Btu/$ft^3$. Proceed as follows:

1. 32 sec to complete one revolution.
2. 3600 ÷ 32 = 112.5.
3. 112.5 x 1 =112.5 $ft^3$ of gas flow/hr.
4. 112.5 x 1050 = 118,125 Btuh input.

If the desired gas input is 115,000 Btuh, only a minor change in the manifold pressure is required.

Observe manifold pressure(s) and proceed as follows to adjust gas input(s):

1. Remove regulator cover screw(s) over plastic adjustment screw(s) on gas valve (see Fig. 40).
2. Turn the high stage plastic adjustment screw clockwise to increase gas input and counterclockwise to decrease input (see Fig. 40). Manifold pressure must be between 3.2 and 3.8 IN. W.C. for high stage.
3. Replace high stage regulator cover screw on gas valve (see Fig. 40).
4. Turn the low stage plastic adjustment screw clockwise to increase gas input and counterclockwise to decrease input (see Fig. 40). Low stage manifold pressure must be between 1.4 and 2.0 IN. W.C.

**NOTE:** Low stage manifold pressure must be adjusted after high stage manifold pressure is already adjusted.

5. Replace low stage regulator cover screw(s) on gas valve (see Fig. 40).
6. Turn off gas supply to unit. Remove manometer from pressure tap and replace pipe plug on manifold (see Fig. 27). Turn on gas and check for leaks

**⚠ WARNING**

**FIRE AND UNIT DAMAGE HAZARD**

Failure to follow this warning could result in personal injury or death and/or property damage.

Unsafe operation of the unit may result if manifold pressure is outside this range.

**Measure Manifold Pressure (Propane Units)**

Refer to propane kit installation instructions for properly checking gas input.

**NOTE:** For installations below 2,000 ft (610 m), refer to the unit rating plate for proper propane conversion kit. For installations above 2,000 ft (610 m), contact your distributor for proper propane conversion kit.

## Check Burner Flame

With control access panel (see Fig. 42) removed, observe the unit heating operation. Watch the burner flames to see if they are light blue and soft in appearance, and that the flames are approximately the same for each burner. Propane will have blue flame (See Fig. 28). Refer to the Maintenance section for information on burner removal.

**Table 16 – Two-Stage Natural Gas Orifice Sizes and Manifold Pressure 208/230VAC Models**

| Nameplate Input, High Stage Btu/hr) | | Altitude of Installation (FT. [m] Above Sea Level) U.S.A.* | | | | |
|---|---|---|---|---|---|---|
| | | 0 to 2000 [0 to 610] | 2001 to 3000* [610 to 914] | 3001 to 4000 [915 to 1219] | 4001 to 5000 [1220 to 1524] | 5001 to 6000 [1524 to 1829] |
| 40000 | Orifice No. (Qty) | 44 (2) | 45 (2)† | 48 (2)† | 48 (2)† | 48 (2)† |
| | Manifold Press. High / Low (in. W.C.) | 3.2 /1.4 | 3.2 /1.4 | 3.8 /1.6 | 3.5 /1.5 | 3.2 /1.4 |
| 60000 | Orifice No. (Qty) | 44 (3) | 45 (3)† | 48 (3)† | 48 (3)† | 48 (3)† |
| | Manifold Press. High / Low (in. W.C.) | 3.2 /1.4 | 3.2 /1.4 | 3.8 /1.6 | 3.5 /1.5 | 3.2 /1.4 |
| 90000 | Orifice No. (Qty) | 38 (3) | 41 (3)† | 41 (3)† | 42 (3)† | 42 (3)† |
| | Manifold Press. High / Low (in. W.C.) | 3.6 /1.6 | 3.8 /1.6 | 3.4 /1.5 | 3.4 /1.5 | 3.2 /1.4 |
| 115000 | Orifice No. (Qty) | 33 (3) | 36 (3)† | 36 (3)† | 36 (3)† | 38 (3)† |
| | Manifold Press. High / Low (in. W.C.) | 3.8 /1.7 | 3.8 /1.7 | 3.6 /1.6 | 3.3 /1.4 | 3.6 /1.5 |
| 127000 | Orifice No. (Qty) | 31 (3) | 31 (3) | 33 (3)† | 33 (3)† | 34 (3)† |
| | Manifold Press. High / Low (in. W.C.) | 3.7 /1.7 | 3.2 /1.4 | 3.5 /1.6 | 3.2 /1.4 | 3.2 /1.4 |
| 130000 | Orifice No. (Qty) | 31 (3) | 31 (3) | 33 (3)† | 33 (3)† | 34 (3)† |
| | Manifold Press. High / Low (in. W.C.) | 3.8 /1.7 | 3.2 /1.4 | 3.7 /1.6 | 3.4 /1.4 | 3.3 /1.4 |

*. In the U.S.A., the input rating for altitudes above 2000 ft (610m) must be reduced by 4% for each 1000 ft (305 m) above sea level.
In Canada, the input rating for altitudes from 2001 to 4500 ft (611 to 1372 m) above sea level must be derated by 10% by an authorized gas conversion station or dealer.
For Canadian Installations from 2000 to 4500 ft, use U.S.A. column 2001 to 3000 ft (610 to 914 m).

†. Orifices available through your distributor.

NOTE: Orifice sizes and manifold pressure settings are based on natural gas with a heating value of 1025 Btu/ft$^3$ and a specific gravity of .6

**Table 17 – Two-Stage Heating Inputs 208/230 VAC Models**

| Heating Input (BTUH) | Number of Orifices | Gas Supply Pressure (IN. W.C.) | | | | Manifold Pressure (IN. W.C.) | |
|---|---|---|---|---|---|---|---|
| | | Natural*† | | Propane*† | | | |
| | | Min | Max | Min | Max | Natural* | Propane*† |
| 40,000 | 2 | 4.0 | 13.0 | 11.0 | 13.0 | 3.2~3.8 | 10.0~11.0 |
| 60,000 | 2 | 4.0 | 13.0 | 11.0 | 13.0 | 3.2~3.8 | 10.0~11.0 |
| 90,000 | 3 | 4.0 | 13.0 | 11.0 | 13.0 | 3.2~3.8 | 10.0~11.0 |
| 115,000 | 3 | 4.0 | 13.0 | 11.0 | 13.0 | 3.2~3.8 | 10.0~11.0 |
| 127,000 | 3 | 4.0 | 13.0 | 11.0 | 13.0 | 3.2~3.8 | 10.0~11.0 |
| 130,000 | 3 | 4.0 | 13.0 | 11.0 | 13.0 | 3.2~3.8 | 10.0~11.0 |

*. Based on altitudes from sea level to 2000 ft (610 m) above sea level. In U.S.A. for altitudes above 2000 ft (610 m), reduce input rating 4 percent for each additional 1000 ft (305 m) above sea level. In Canada, from 2000 ft (610 m) above sea level to 4500 ft (1372 m) above sea level, derate the unit 10 percent.

†. When a unit is converted to propane, different size orifices must be used. See separate, natural-to-propane conversion kit instructions.

## Normal Operation

An LED (light-emitting diode) indicator is provided on the integrated gas unit controller (IGC) to monitor operation. The IGC is located by removing the control access panel (see Fig. 42). During normal operation, the LED is continuously on (See Table 14 for error codes).

## Gas Heating Sequence of Operation

On a call for low stage heating, terminal W1 on the thermostat is energized. On a call for high stage heating both terminals W1 and W2 are energized. Regardless of the stage of the heating call, the induced-draft motor is turned on to high speed for a 15 sec pre-purge time. After the pre-purge, when the pressure switch senses that sufficient combustion air is being moved by the induced-draft motor, the ignition sequence begins. The IGC will energize the sparker and the low stage gas valve solenoid. Upon sensing flame, the IGC will check the heating call. If W2 is not energized, the IGC will drop the induced-draft motor to low speed and maintain the gas valve on low stage. If W2 is energized, the IGC will maintain the induced-draft motor on high speed and energize the high stage gas valve solenoid. Thirty sec after flame is sensed the IGC will turn on the evaporator fan motor. If W2 is not energized, the evaporator fan motor will run on low heat speed. If W2 is energized, the evaporator fan motor will run on high heat speed. After the call for heat is satisfied, the IGC will run the evaporator fan motor an additional field-selectable time of 90, 120, 150, or 180 sec before shutting the evaporator fan motor off.

## Limit Switches

Normally closed limit switch(es) (LS) complete the control circuit. Should the leaving-air temperature rise above the maximum allowable temperature, the limit switch opens and the control circuit "breaks." Any interruption in the control circuit instantly closes the gas valve and stops gas flow to the burners. The blower motor continues to run until LS resets.

When the air temperature at the limit switch drops to the low-temperature setting of the limit switch, the switch closes and completes the control circuit. The direct-spark ignition system cycles and the unit returns to normal heating operation.

**Table 18 – LED Indications**

| Status Code | LED Indication |
|---|---|
| Normal Operation* | On |
| No Power or Hardware Failure | Off |
| Check Fuse, Low Voltage Circuit | 1 Flash |
| Limit Switch Fault | 2 Flashes |
| Flame Sense Fault | 3 Flashes |
| Four Consecutive Limit Switch Faults | 4 Flashes |
| Ignition Lockout Fault | 5 Flashes |
| Pressure Switch Fault | 6 Flashes |
| Rollout Switch Fault | 7 Flashes |
| Internal Control Fault | 8 Flashes |
| Temporary 1 hr auto reset† | 9 Flashes |

*. LED indicates acceptable operation. Do not change ignition control board.

†. This code indicates an internal processor fault that will reset itself in one hr. Fault can be caused by stray RF signals in the structure or nearby. This is a UL requirement.

NOTES:
When W is energized the burners will remain on for a minimum of 60 sec.
If more than one error code exists they will be displayed on the LED in sequence.

## Rollout Switch

The function of the rollout switch is to close the main gas valve in the event of flame rollout. The switch is located above the main burners. When the temperature at the rollout switch reaches the maximum allowable temperature, the control circuit trips, closing the gas valve and stopping gas flow to the burners. The indoor (evaporator) fan motor (IFM) and induced draft motor continue to run until switch is reset. The IGC LED will display FAULT CODE 7.

## Induced Draft (combustion air) Blower Assembly

The induced-draft blower assembly consists of the inducer motor, the blower housing, and the induced-draft blower wheel.

Clean the inducer wheel periodically to assure proper airflow and heating efficiency. Inspect blower wheel every fall before the heating season.

To inspect blower wheel, remove draft hood assembly. Shine a flashlight into opening to inspect wheel. If cleaning is required, remove induced-draft blower assembly as follows:

1. Remove control access panel. (see Fig. 42).
2. Remove the 5 screws that attach induced-draft blower assembly to the flue collector box cover.
3. Slide the assembly out of the unit. (See Fig. 44). Clean the blower wheel. If additional cleaning is required, continue with Steps 4 and 5.
4. To remove blower wheel, remove 2 setscrews.
5. To remove inducer motor, remove screws that hold the inducer motor to the blower housing.
6. To reinstall, reverse the procedure outlined above.

## Flue Gas Passageways

To inspect the flue collector box and upper areas of the heat exchanger:

1. Remove the induced draft blower assembly according to directions in the Induced Draft Blower Assembly section.
2. Remove the 11 screws holding the flue collector box cover (See Fig. 41) to the heat exchanger assembly. Inspect the heat exchangers.
3. Clean all surfaces, as required, using a wire brush.

## Limit Switch

Remove blower access panel (see Fig. 42). Limit switch(es) are located on the fan partition.

## Burner Ignition

Unit is equipped with a direct spark ignition 100 percent lockout system. Ignition module (IGC) is located in the control box (See Fig. 41). Module contains a self-diagnostic LED. During servicing, refer to label diagram or Table 14 in these instructions for LED interpretation.

If lockout occurs, unit may be reset by either momentarily interrupting power supply to unit or by turning selector switch to OFF position at the thermostat.

## Main Burners

At the beginning of each heating season, inspect for deterioration or blockage due to corrosion or other causes. Observe the main burner flames and adjust, if necessary.

Removal of Gas Train

To remove the gas train for servicing:

1. Shut off main gas valve.
2. Shut off power to unit and install lockout tag.
3. Remove control access panel (See Fig. 42).
4. Disconnect gas piping at unit gas valve.
5. Remove fan partition mounting bracket (2 screws located on the left side of control compartment on the fan partition panel). Slide bracket forward, bottom first, to remove. (See Fig. 41.)
6. Remove wires connected to gas valve. Mark each wire.
7. Remove the mounting screw that attaches the burner rack to the unit base (See Fig. 41).
8. Partially slide the burner rack out of the unit (see Fig. 41 and Fig. 44). Remove ignitor and sensor wires at the burner assembly. Remove wires to rollout switch.
9. Slide the burner rack out of the unit (See Fig. 41 and Fig. 44).
10. To reinstall, reverse the procedure outlined above.
11. Check all connections for leaks.

**⚠ WARNING**

**FIRE, EXPLOSION HAZARD**

Failure to follow this warning could result in personal injury, death or property damage.

Do not purge gas supply into the combustion chamber. Do not use a match or other open flame to check for gas leaks.

Use a commercially available soap solution made specifically for the detection of leaks to check all connections. A fire or explosion may result causing property damage, personal injury or loss of life.

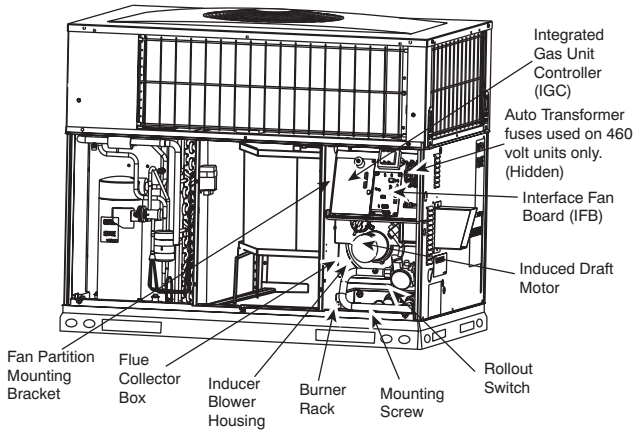


A09193

**Fig. 41 – Blower Housing and Flue Collector Box**

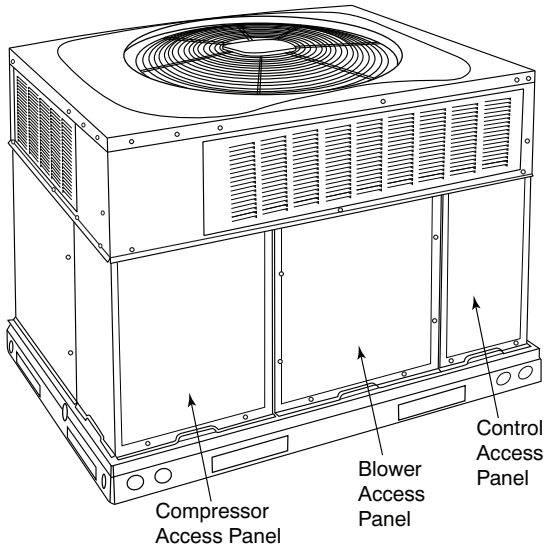


A09211

**Fig. 42 – Unit Access Panels**

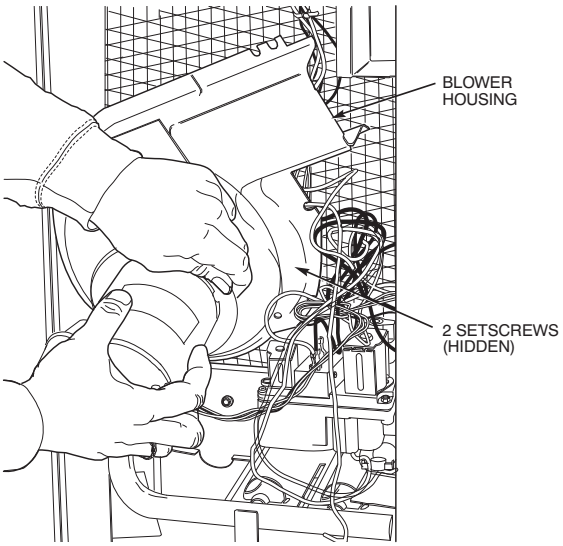


C99085

**Fig. 43 – Removal of Motor and Blower Wheel**

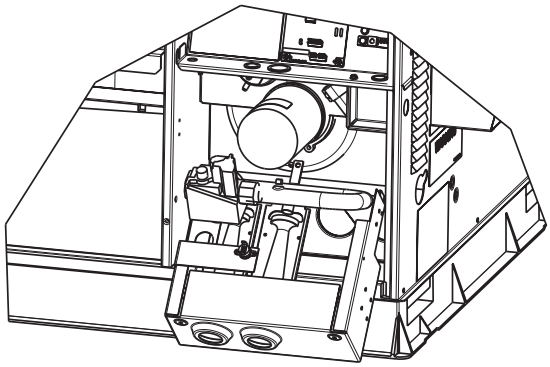

A07680

**Fig. 44 – Burner Rack Removed (Standard and Standard Low NOx Models Only)**

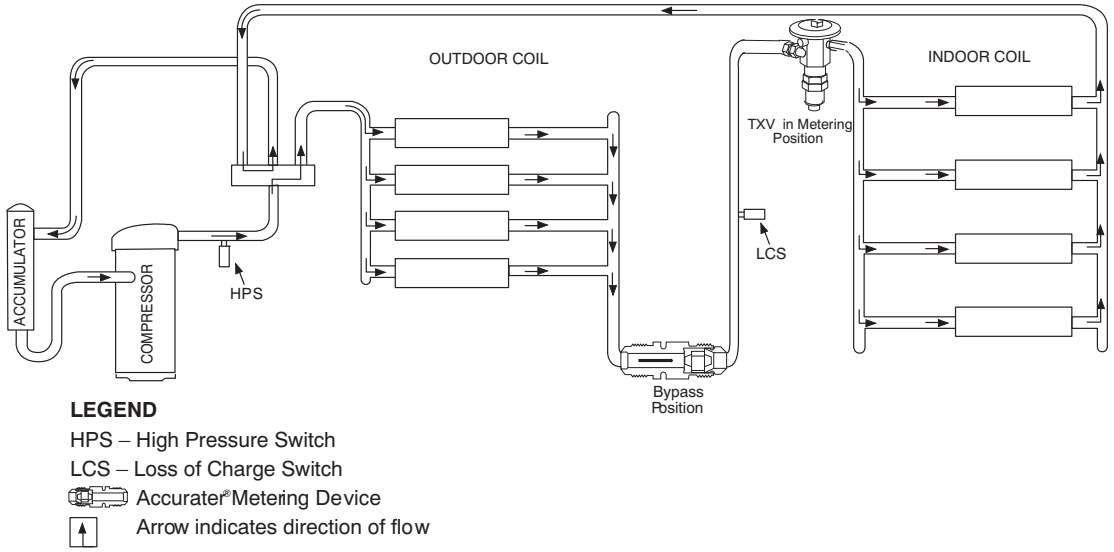


C03011

**Fig. 45 – Typical Heat Pump Operation, Cooling Mode**

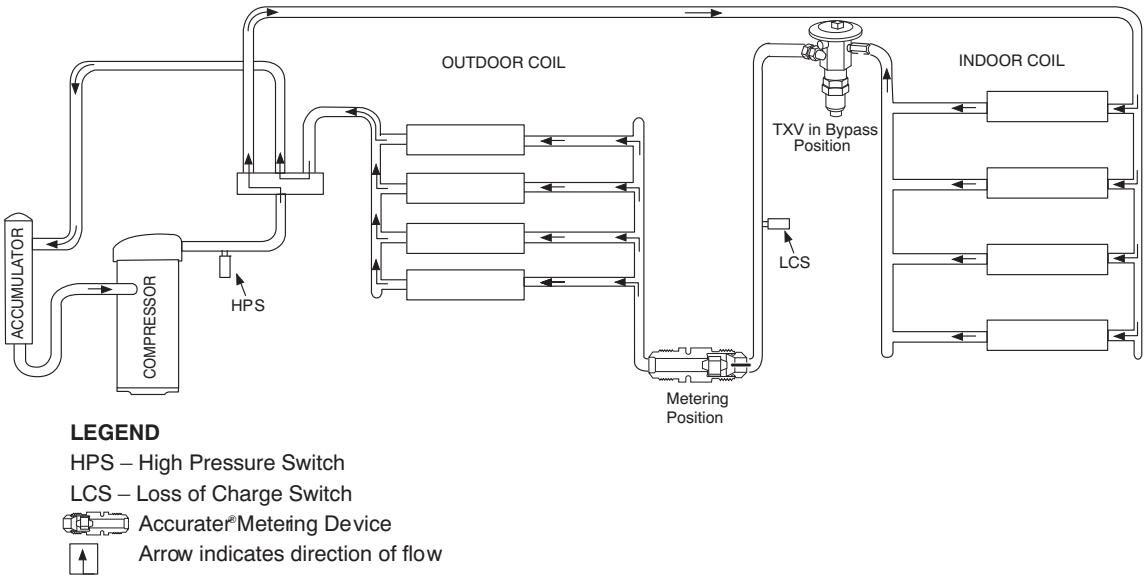


C03012

**Fig. 46 – Typical Heat Pump Operation, Heating Mode**

## Care and Maintenance

To assure high performance and minimize possible equipment malfunction, it is essential that maintenance be performed periodically on this equipment. The frequency with which maintenance is performed is dependent on such factors as hours of operation, geographic location, and local environmental conditions.

**⚠ WARNING**

**ELECTRICAL SHOCK HAZARD**

Failure to follow this warning could result in equipment damage or death.

Disconnect all electrical power to unit before performing any maintenance or service on outdoor unit. Remember to disconnect power supply to air handler as this unit supplies low-voltage power to the outdoor unit. Lock out and tag switch with suitable warning label.

The minimum maintenance that should be performed on this equipment is as follows:

1. Check outdoor coil for cleanliness each heating and cooling season and clean as necessary.
2. Check fan motor and blade for cleanliness each month during cooling season and clean as necessary.
3. Check electrical connections for tightness and controls for proper operation each cooling season and service as necessary.

**⚠ CAUTION**

**UNIT DAMAGE HAZARD**

Failure to follow this caution may result in equipment damage or improper operation.

Because of possible damage to the equipment or personal injury, maintenance should be performed by qualified personnel only.

### Desert and Seacoast Locations

Special consideration must be given to installation and maintenance of condensing units installed in coastal or desert locations. This is because salt and alkali content of sand adheres to aluminum fins of coil and can cause premature coil failure due to corrosion.

Preventive measures can be taken during installations, such as:

1. Locate unit on side of structure opposite prevailing winds.
2. Install unit where drifting sand cannot pile up against coil.

#### Maintenance in desert and seacoast locations:

1. Frequent inspection of coil and basepan especially after storms and/or high winds.
2. Clean coil by flushing out sand from between coil fins and out of basepan as frequently as inspection determines necessary.
3. In off season, cover with covering that allows air to circulate through but prevents sand from sifting in (such as canvas material). Do not use plastic as plastic will hold moisture possibly causing corrosion.

### Cleaning Coil

1. Remove side panel. (See Remove Side Panel in Cabinet section of this manual.)

**⚠ CAUTION**

**UNIT DAMAGE HAZARD**

Failure to follow this caution may result in equipment damage or improper operation.

Coil fin damage can result in higher operating costs or compressor damage. Do not use flame, high-pressure water, steam, volatile or corrosive cleaners on fins or tubing.

2. Clean coil using vacuum cleaner and its crevice tool. Move crevice tool vertically, close to area being cleaned, making sure tool touches only dirt on fins and not fins. to prevent fin damage, do not scrub fins with tool or move tool horizontally against fins.
3. If oil deposits are present, spray coil with ordinary household detergent. Wait 10 minutes, and proceed to next step.
4. Using garden hose, spray coil vertically downward with constant stream of water at moderate pressure. Keep nozzle at a 15- to 20° angle, about 3 in. from coil face and 18 in. from tube. Spray so debris is washed out of coil and basepan.
5. Reinstall side panel.
6. Reconnect electrical power and check for proper operation.

### Cleaning Outdoor Fan Motor and Blade

1. Remove grille, fan motor and blade. Be careful not to bend or dent fan blade.
2. Clean motor and blade with soft brush or cloth. Be careful not to disturb balance weights on fan blade.
3. Check fan blade setscrew for tightness.
4. Reinstall fan motor and blade to grille and check for alignment.
5. Reinstall grille and position blade.
6. Reconnect electrical power and check for proper operation.

### Electrical Controls and Wiring

1. Disconnect power to unit.
2. Check all electrical connections for tightness. Tighten all screws on electrical connections. If any connections appear to be burned or smoky, disassemble the connection, clean all parts and stripped wires, and reassemble. Use a new connector if old one is burned or corroded, and crimp tightly.
3. Reconnect electrical power to unit and observe unit through 1 complete operating cycle.
4. If there are any discrepancies in operating cycle, troubleshoot to find cause and correct.

### Refrigerant Circuit

1. Check refrigerant charge using the superheat method, and if low on charge, check unit for leaks using an electronic leak detector.
2. If any leaks are found, remove and reclaim or isolate charge (pumpdown) if applicable. Make necessary repairs.
3. Evacuate, recharge, and observe unit through 1 complete operating cycle.

### Final Check-Out

After the unit has been operating, the following items should be checked.

1. Check that unit operational noise is not excessive due to vibration of component, tubing, panels, etc. If present, isolate problem and correct.
2. Check to be sure caps are installed on high flow valves and are tight.
3. Check to be sure tools, loose parts, and debris are removed from unit.
4. Check to be sure all panels and screws are in place and tight.

**Table 19 – Pressure vs. Temperature Chart - R-410A Refrigerant**

| PSIG | °F | °C | PSIG | °F | °C | PSIG | °F | °C | PSIG | °F | °C | PSIG | °F | °C | PSIG | °F | °C |
|---|---|---|---|---|---|---|---|---|---|---|---|---|---|---|---|---|---|
| 12 | –37.7 | -38.7 | 114 | 37.8 | 3.2 | 216 | 74.3 | 23.5 | 318 | 100.2 | 37.9 | 420 | 120.7 | 49.3 | 522 | 137.6 | 58.7 |
| 14 | –34.7 | -37.0 | 116 | 38.7 | 3.7 | 218 | 74.9 | 23.8 | 320 | 100.7 | 38.2 | 422 | 121.0 | 49.4 | 524 | 137.9 | 58.8 |
| 16 | –32.0 | -35.6 | 118 | 39.5 | 4.2 | 220 | 75.5 | 24.2 | 322 | 101.1 | 37.4 | 424 | 121.4 | 47.7 | 526 | 138.3 | 59.1 |
| 18 | –29.4 | -34.1 | 120 | 40.5 | 4.7 | 222 | 76.1 | 24.5 | 324 | 101.6 | 37.8 | 426 | 121.7 | 49.8 | 528 | 138.6 | 59.2 |
| 20 | –26.9 | -32.7 | 122 | 41.3 | 5.2 | 224 | 76.7 | 24.8 | 326 | 102.0 | 38.9 | 428 | 122.1 | 50.1 | 530 | 138.9 | 59.4 |
| 22 | –24.5 | -31.3 | 124 | 42.2 | 5.7 | 226 | 77.2 | 25.1 | 328 | 102.4 | 39.1 | 430 | 122.5 | 50.3 | 532 | 139.2 | 59.6 |
| 24 | –22.2 | -30.1 | 126 | 43.0 | 6.1 | 228 | 77.8 | 25.4 | 330 | 102.9 | 39.4 | 432 | 122.8 | 50.4 | 534 | 139.5 | 59.7 |
| 26 | –20.0 | -28.9 | 128 | 43.8 | 6.6 | 230 | 78.4 | 25.6 | 332 | 103.3 | 39.6 | 434 | 123.2 | 50.7 | 536 | 139.8 | 59.9 |
| 28 | –17.9 | -28.7 | 130 | 44.7 | 7.1 | 232 | 78.9 | 26.1 | 334 | 103.7 | 39.8 | 436 | 123.5 | 50.8 | 538 | 140.1 | 60.1 |
| 30 | –15.8 | -26.6 | 132 | 45.5 | 7.5 | 234 | 79.5 | 26.4 | 336 | 104.2 | 40.1 | 438 | 123.9 | 51.1 | 540 | 140.4 | 60.2 |
| 32 | –13.8 | -25.4 | 134 | 46.3 | 7.9 | 236 | 80.0 | 26.7 | 338 | 104.6 | 40.3 | 440 | 124.2 | 51.2 | 544 | 141.0 | 60.6 |
| 34 | –11.9 | -24.4 | 136 | 47.1 | 8.4 | 238 | 80.6 | 27.0 | 340 | 105.1 | 40.6 | 442 | 124.6 | 51.4 | 548 | 141.6 | 60.9 |
| 36 | –10.1 | -23.4 | 138 | 47.9 | 8.8 | 240 | 81.1 | 27.3 | 342 | 105.4 | 40.8 | 444 | 124.9 | 51.6 | 552 | 142.1 | 61.2 |
| 38 | –8.3 | -22.4 | 140 | 48.7 | 9.3 | 242 | 81.6 | 27.6 | 344 | 105.8 | 41.0 | 446 | 125.3 | 51.8 | 556 | 142.7 | 61.5 |
| 40 | –6.5 | -21.4 | 142 | 49.5 | 9.7 | 244 | 82.2 | 27.9 | 346 | 106.3 | 41.3 | 448 | 125.6 | 52.0 | 560 | 143.3 | 61.8 |
| 42 | –4.5 | -20.3 | 144 | 50.3 | 10.2 | 246 | 82.7 | 28.2 | 348 | 106.6 | 41.4 | 450 | 126.0 | 52.2 | 564 | 143.9 | 62.2 |
| 44 | –3.2 | -19.6 | 146 | 51.1 | 10.6 | 248 | 83.3 | 28.5 | 350 | 107.1 | 41.7 | 452 | 126.3 | 52.4 | 568 | 144.5 | 62.5 |
| 46 | –1.6 | -18.7 | 148 | 51.8 | 11.0 | 250 | 83.8 | 28.8 | 352 | 107.5 | 41.9 | 454 | 126.6 | 52.6 | 572 | 145.0 | 62.8 |
| 48 | 0.0 | -17.8 | 150 | 52.5 | 11.4 | 252 | 84.3 | 29.1 | 354 | 107.9 | 42.2 | 456 | 127.0 | 52.8 | 576 | 145.6 | 63.1 |
| 50 | 1.5 | -16.9 | 152 | 53.3 | 11.8 | 254 | 84.8 | 29.3 | 356 | 108.3 | 42.4 | 458 | 127.3 | 52.9 | 580 | 146.2 | 63.4 |
| 52 | 3.0 | -16.1 | 154 | 54.0 | 12.2 | 256 | 85.4 | 29.7 | 358 | 108.8 | 42.7 | 460 | 127.7 | 53.2 | 584 | 146.7 | 63.7 |
| 54 | 4.5 | -15.3 | 156 | 54.8 | 12.7 | 258 | 85.9 | 29.9 | 360 | 109.2 | 42.9 | 462 | 128.0 | 53.3 | 588 | 147.3 | 64.1 |
| 56 | 5.9 | -14.5 | 158 | 55.5 | 13.1 | 260 | 86.4 | 30.2 | 362 | 109.6 | 43.1 | 464 | 128.3 | 53.5 | 592 | 147.9 | 64.4 |
| 58 | 7.3 | -13.7 | 160 | 56.2 | 13.4 | 262 | 86.9 | 30.5 | 364 | 110..0 | 43.3 | 466 | 128.7 | 53.7 | 596 | 148.4 | 64.7 |
| 60 | 8.6 | -13.0 | 162 | 57.0 | 13.9 | 264 | 87.4 | 30.8 | 366 | 110.4 | 43.6 | 468 | 129.0 | 53.9 | 600 | 149.0 | 65.0 |
| 62 | 10.0 | -12.2 | 164 | 57.7 | 14.3 | 266 | 87.9 | 31.1 | 368 | 110.8 | 43.8 | 470 | 129.3 | 54.1 | 604 | 149.5 | 65.3 |
| 64 | 11.3 | -11.5 | 166 | 58.4 | 14.7 | 268 | 88.4 | 31.3 | 370 | 111.2 | 44.0 | 472 | 129.7 | 53.2 | 608 | 150.1 | 65.6 |
| 66 | 12.6 | -10.8 | 168 | 59.0 | 15.0 | 270 | 88.9 | 31.6 | 372 | 111.6 | 44.2 | 474 | 130.0 | 54.4 | 612 | 150.6 | 65.9 |
| 68 | 13.8 | -10.1 | 170 | 59.8 | 15.4 | 272 | 89.4 | 31.9 | 374 | 112.0 | 44.4 | 476 | 130.3 | 54.6 | 616 | 151.2 | 66.2 |
| 70 | 15.1 | -9.4 | 172 | 60.5 | 15.8 | 274 | 89.9 | 32.2 | 376 | 112.4 | 44.7 | 478 | 130.7 | 54.8 | 620 | 151.7 | 66.5 |
| 72 | 16.3 | -8.7 | 174 | 61.1 | 16.2 | 276 | 90.4 | 32.4 | 378 | 112.6 | 44.8 | 480 | 131.0 | 55.0 | 624 | 152.3 | 66.8 |
| 74 | 17.5 | -8.1 | 176 | 61.8 | 16.6 | 278 | 90.9 | 32.7 | 380 | 113.1 | 45.1 | 482 | 131.3 | 55.2 | 628 | 152.8 | 67.1 |
| 76 | 18.7 | -7.4 | 178 | 62.5 | 16.9 | 280 | 91.4 | 33.0 | 382 | 113.5 | 45.3 | 484 | 131.6 | 55.3 | 632 | 153.4 | 67.4 |
| 78 | 19.8 | -6.8 | 180 | 63.1 | 17.3 | 282 | 91.9 | 33.3 | 384 | 113.9 | 45.5 | 486 | 132.0 | 55.6 | 636 | 153.9 | 67.7 |
| 80 | 21.0 | -6.1 | 182 | 63.8 | 17.7 | 284 | 92.4 | 33.6 | 386 | 114.3 | 45.7 | 488 | 132.3 | 55.7 | 640 | 154.5 | 68.1 |
| 82 | 22.1 | -5.5 | 184 | 64.5 | 18.1 | 286 | 92.8 | 33.8 | 388 | 114.7 | 45.9 | 490 | 132.6 | 55.9 | 644 | 155.0 | 68.3 |
| 84 | 23.2 | -4.9 | 186 | 65.1 | 18.4 | 288 | 93.3 | 34.1 | 390 | 115.0 | 46.1 | 492 | 132.9 | 56.1 | 648 | 155.5 | 68.6 |
| 86 | 24.3 | -4.3 | 188 | 65.8 | 18.8 | 290 | 93.8 | 34.3 | 392 | 115.5 | 46.4 | 494 | 133.3 | 56.3 | 652 | 156.1 | 68.9 |
| 88 | 25.4 | -3.7 | 190 | 66.4 | 19.1 | 292 | 94.3 | 34.6 | 394 | 115.8 | 46.6 | 496 | 133.6 | 56.4 | 656 | 156.6 | 69.2 |
| 90 | 26.4 | -3.1 | 192 | 67.0 | 19.4 | 294 | 94.8 | 34.9 | 396 | 116.2 | 46.8 | 498 | 133.9 | 56.6 | 660 | 157.1 | 69.5 |
| 92 | 27.4 | -2.6 | 194 | 67.7 | 19.8 | 296 | 95.2 | 35.1 | 398 | 116.6 | 47.0 | 500 | 134.0 | 56.7 | 664 | 157.7 | 69.8 |
| 94 | 28.5 | -1.9 | 196 | 68.3 | 20.2 | 298 | 95.7 | 35.4 | 400 | 117.0 | 47.2 | 502 | 134.5 | 56.9 | 668 | 158.2 | 70.1 |
| 96 | 29.5 | -1.4 | 198 | 68.9 | 20.5 | 300 | 96.2 | 35.7 | 402 | 117.3 | 47.4 | 504 | 134.8 | 57.1 | 672 | 158.7 | 70.4 |
| 98 | 30.5 | -0.8 | 200 | 69.5 | 20.8 | 302 | 96.6 | 35.9 | 404 | 117.7 | 47.6 | 506 | 135.2 | 57.3 | 676 | 159.2 | 70.7 |
| 100 | 31.2 | -0.4 | 202 | 70.1 | 21.2 | 304 | 97.1 | 36.2 | 406 | 118.1 | 47.8 | 508 | 135.5 | 57.5 | 680 | 159.8 | 71.0 |
| 102 | 32.2 | 0.1 | 204 | 70.7 | 21.5 | 306 | 97.5 | 36.4 | 408 | 118.5 | 47.1 | 510 | 135.8 | 57.7 | 684 | 160.3 | 71.3 |
| 104 | 33.2 | 0.7 | 206 | 71.4 | 21.9 | 308 | 98.0 | 36.7 | 410 | 118.8 | 48.2 | 512 | 136.1 | 57.8 | 688 | 160.8 | 71.6 |
| 106 | 34.1 | 1.2 | 208 | 72.0 | 22.2 | 310 | 98.4 | 36.9 | 412 | 119.2 | 48.4 | 514 | 136.4 | 58.0 | 692 | 161.3 | 71.8 |
| 108 | 35.1 | 1.7 | 210 | 72.6 | 22.6 | 312 | 98.9 | 37.2 | 414 | 119.6 | 47.7 | 516 | 136.7 | 57.7 | 696 | 161.8 | 72.1 |
| 110 | 35.5 | 1.9 | 212 | 73.2 | 22.9 | 314 | 99.3 | 37.4 | 416 | 119.9 | 48.8 | 518 | 137.0 | 58.3 | | | |
| 112 | 36.9 | 2.7 | 214 | 73.8 | 23.2 | 316 | 99.7 | 37.6 | 418 | 120.3 | 49.1 | 520 | 137.3 | 58.5 | | | |

# Air Conditioner Troubleshooting Chart

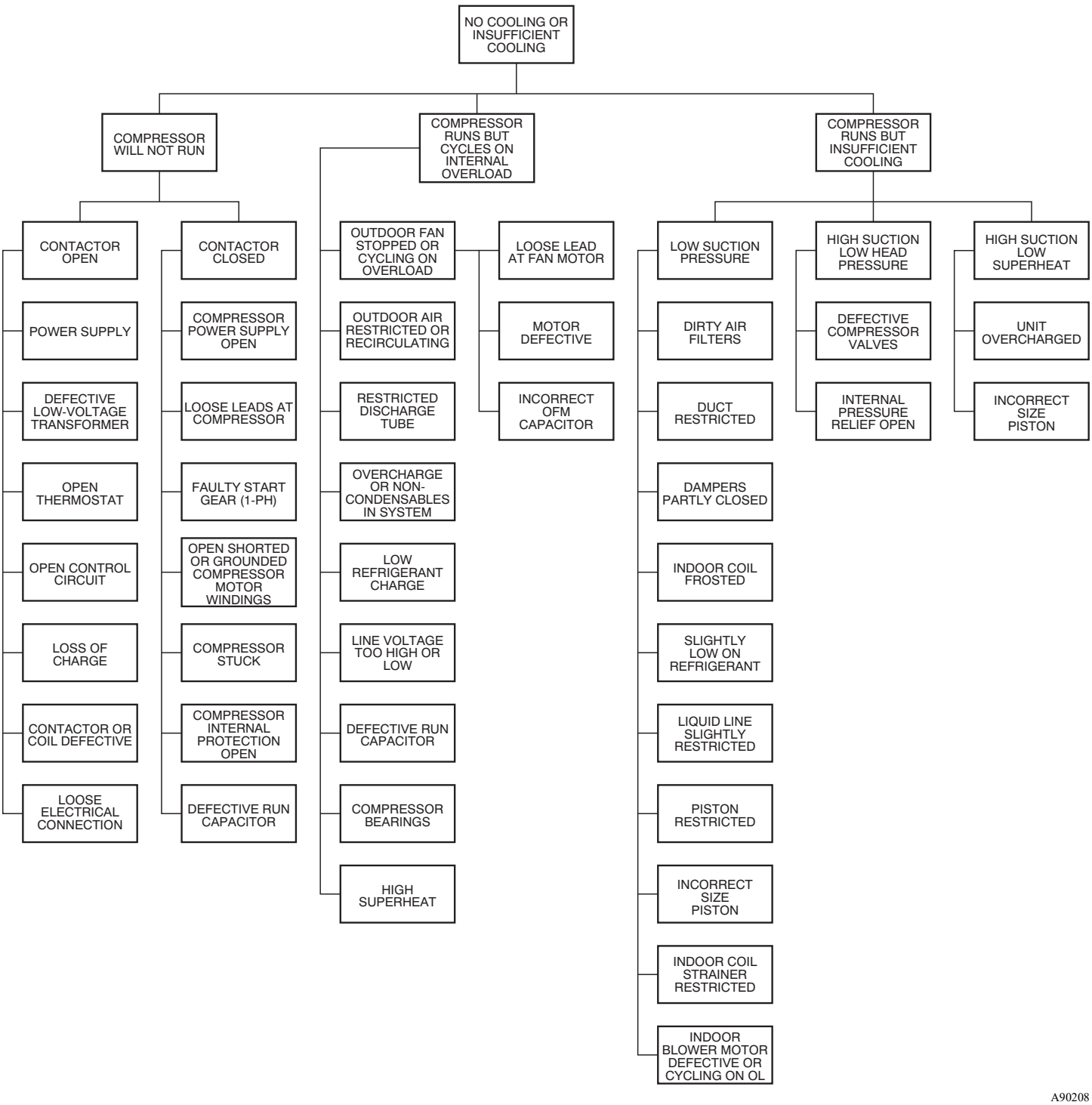


**Fig. 47 – Air Conditioner Troubleshooting Chart**

# Heat Pump Troubleshooting Heating Cycle

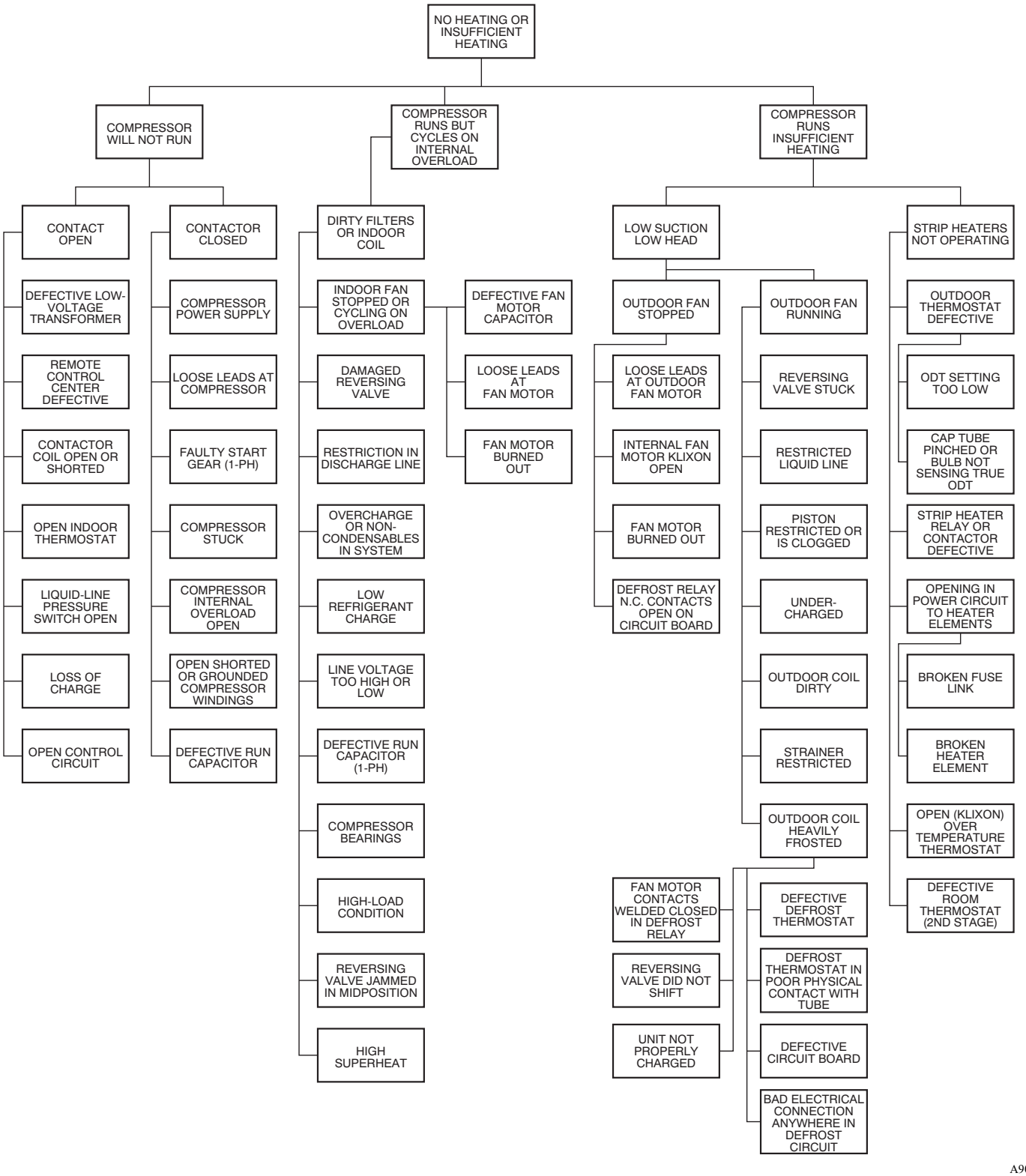


**Fig. 48 – Heat Pump Troubleshooting - Heating Cycle**

# Heat Pump Troubleshooting Cooling Cycle

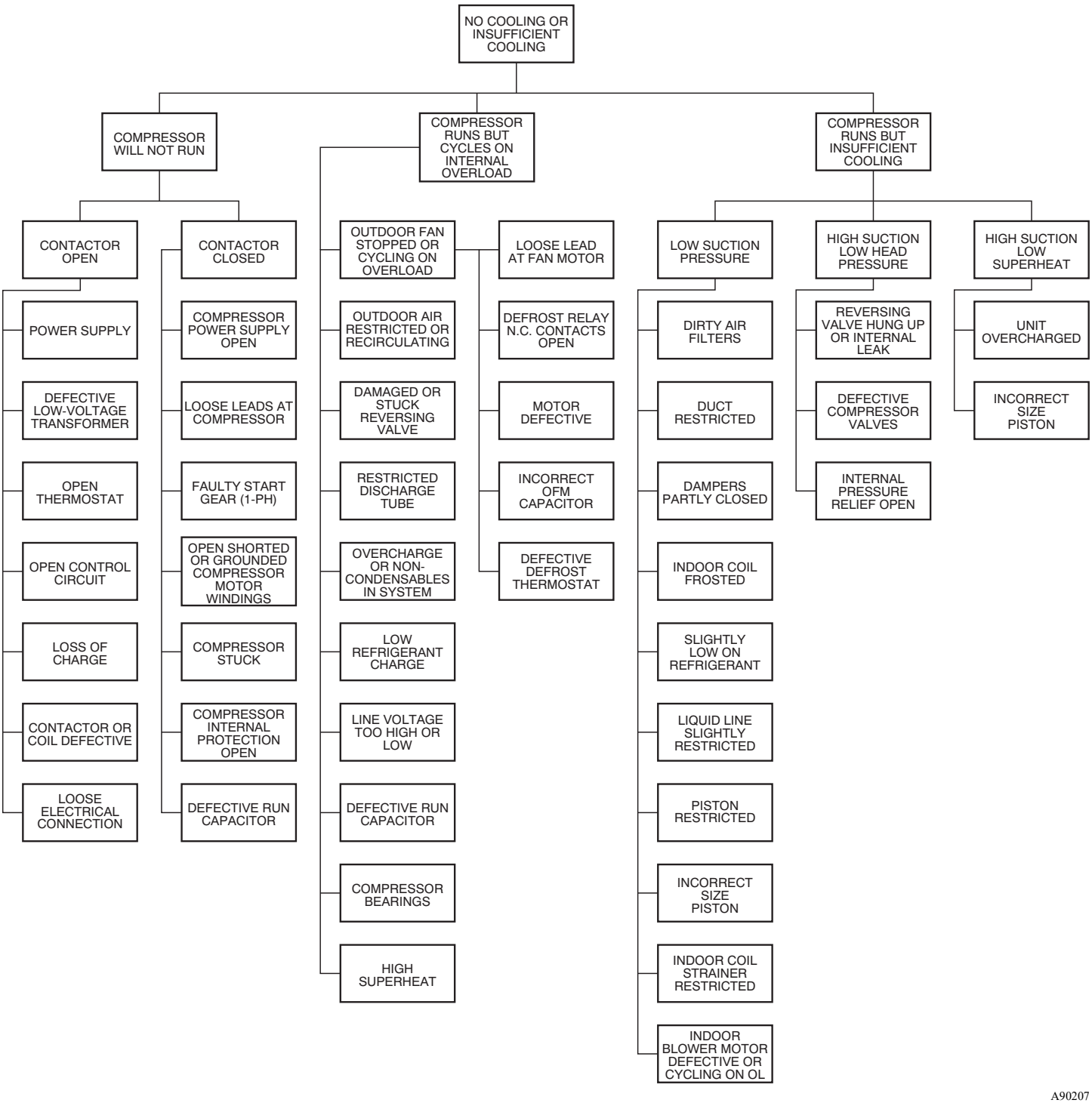


**Fig. 49 – Heat Pump Troubleshooting - Cooling Cycle**

**Table 20 – Troubleshooting Chart for Single Stage Cooling or Heat Pump**

| Symptom | Cause | Remedy |
|---|---|---|
| Compressor and condenser fan will not start. | Power failure | Call power company |
| | Fuse blown or circuit breaker tripped | Replace fuse or reset circuit breaker |
| | Defective contactor, transformer, or high-pressure, loss-of-charge or low-pressure switch | Replace component |
| | Insufficient line voltage | Determine cause and correct |
| | Incorrect or faulty wiring | Check wiring diagram and rewire correctly |
| | Thermostat setting too high | Lower thermostat temperature setting below room temperature |
| Compressor will not start but condenser fan runs | Faulty wiring or loose connections in compressor circuit | Check wiring and repair or replace |
| | Compressor motor burned out, seized, or | Determine cause |
| | internal overload open | Replace compressor |
| | Defective run/start capacitor, overload, start relay | Determine cause and replace |
| | One leg of 3-phase power dead | Replace fuse or reset circuit breaker<br>Determine cause |
| | Low input voltage | Determine cause and correct |
| Three-phase scroll compressor | Scroll compressor is rotating in the wrong direction | Correct the direction of rotation by reversing the |
| makes excessive noise, and there may be a low pressure differential. | | 3-phase power leads to the unit. Shut down unit to allow pressures to equalize. |
| Compressor cycles (other than normally satisfying thermostat) | Refrigerant overcharge or undercharge | Recover refrigerant, evacuate system, and recharge to capacities shown on rating plate |
| | Defective compressor | Replace and determine cause |
| | Insufficient line voltage | Determine cause and correct |
| | Blocked outdoor coil | Determine cause and correct |
| | Defective run/start capacitor | Determine cause and replace |
| | Faulty outdoor fan motor or capacitor | Replace |
| | Restriction in refrigerant system | Locate restriction and remove |
| Compressor operates continuously | Dirty air filter | Replace filter |
| | Unit undersized for load | Decrease load or increase unit size |
| | Thermostat temperature set too low | Reset thermostat |
| | Low refrigerant charge | Locate leak, repair, and recharge |
| | Air in system | Recover refrigerant, evacuate system, and recharge |
| | Outdoor coil dirty or restricted | Clean coil or remove restriction |
| Excessive head pressure | Dirty air filter | Replace filter |
| | Dirty condenser coil | Clean coil |
| | Refrigerant overcharged | Recover excess refrigerant |
| | Air in system | Recover refrigerant, evacuate system, and recharge |
| | Condenser air restricted or air short-cycling | Determine cause and correct |
| Head pressure too low | Low refrigerant charge | Check for leaks, repair, and recharge. |
| | Restriction in liquid tube | Remove restriction |
| Excessive suction pressure | Refrigerant overcharged | Recover excess refrigerant |
| Suction pressure too low | Dirty air filter | Replace filter |
| | Low refrigerant charge | Check for leaks, repair and recharge |
| | Metering device or low side restricted | Remove source of restriction |
| | Insufficient evaporator airflow | Increase air quantity<br>Check filter–replace if necessary |
| | Temperature too low in conditioned area | Reset thermostat |
| | Outdoor ambient below 55°F (13°C) | Install low-ambient kit |
| | Filter drier restricted | Replace filter |

**Table 21 – Troubleshooting Guide–Heating for Single Stage Gas**

| Symptom | Cause | Remedy |
|---|---|---|
| Burners will not ignite | Water in gas line | Drain. Install drip leg. |
| | No power to furnace | Check power supply fuses, wiring or circuit breaker. |
| | No 24-v power supply to control circuit | Check transformer.<br>NOTE: Some transformers have internal over-current protection that requires a cool-down period to reset. |
| | Mis-wired or loose connections | Check all wiring and wire nut connections |
| | Misaligned spark electrodes | Check flame ignition and sense electrode positioning.<br>Adjust as necessary. |
| | Spark gap out of tolerance | For all standard and low NOx models, spark gap must be between .110" and .150" for optimal performance. For Ultra Low NOx models only, spark gap must be between .090" and .110" for optimal performance. |
| | Excessive gas at main burner (Ultra Low NOx models only) | Adjust manifold pressure down to meet rated heating input value of unit. |
| | No gas at main burners | 1. Check gas line for air. Purge as necessary. NOTE: After purging gas line of air, wait at least 5 minutes for any gas to dissipate before attempting to light unit.<br>2. Check gas valve. |
| Inadequate heating | Dirty air filter | Clean or replace filter as necessary |
| | Gas input to furnace too low | Check gas pressure at manifold match with that on unit nameplate. Check gas orifices for any blockage and clean as necessary. |
| | Unit undersized for application | Replace with proper unit or add additional unit |
| | Restricted airflow | Clean or replace filter. Remove any restriction. |
| | Limit switch cycles main burners | Check rotation of blower, temperature rise of unit. Adjust as necessary. |
| Poor flame characteristics | Incomplete combustion results in: Aldehyde odors, carbon monoxide, sooting flame, floating flame | 1. Tighten all screws around burner compartment<br>2. Cracked heat exchanger. Replace.<br>3. Unit over-fired. Reduce input (change orifices or adjust gas line or manifold pressure).<br>4. Check burner alignment.<br>5. Inspect heat exchanger for blockage. Clean as necessary. |

**Table 22 – Troubleshooting Guide–LED Status Codes for Single Stage Gas**

| Symptom | Cause | Remedy |
|---|---|---|
| No Power or Hardware failure (LED OFF) | Loss of power to control module (IGC)*. | Check 5-amp fuse son IGC*, power to unit, 24-v circuit breaker, and transformer. Units without a 24-v circuit breaker have an internal overload in the 24-v transformer. If the overload trips, allow 10 minutes for automatic reset. |
| Check fuse, low voltage circuit (LED 1 flash) | Fuse is blown or missing or short circuit in secondary (24VAC) wiring. | Replace fuse if needed. Verify no short circuit in low voltage (24 VAC wiring). |
| Limit switch faults (LED 2 flashes) | High temperature limit switch is open. | Check the operation of the indoor (evaporator) fan motor. Ensure that the supply-air temperature rise is in accordance with the range on the unit nameplate. Clean or replace filters. |
| Flame sense fault (LED 3 flashes) | The IGC* sensed flame that should not be present. | Reset unit. If problem persists, replace control board. |
| 4 consecutive limit switch faults (LED 4 flashes) | Inadequate airflow to unit. | Check the operation of the indoor (evaporator) fan motor and that supply-air temperature rise agrees with range on unit nameplate information. |
| Ignition lockout fault (LED 5 flashes) | Unit unsuccessfully attempted ignition for 15 minutes. | Check ignitor and flame sensor electrode spacing, gaps, etc. Ensure that fame sense and ignition wires are properly terminated. Verify that unit is obtaining proper amount of gas. Refer to Table 21 for more specific information. |
| Pressure Switch fault (LED 6 flashes) | Open pressure switch. | Verify wiring connections to pressure switch and inducer motor. Verify pressure switch hose is tightly connected to both inducer housing and pressure switch. Verify inducer wheel is properly attached to inducer motor shaft. Verify inducer motor shaft is turning. |
| Rollout switch fault (Standard and Low NOx models)<br>Burner Thermal Switch fault (Ultra Low NOx) (LED 7 flashes) | Rollout switch has opened. | Rollout switch will automatically reset, but IGC* will continue to lockout unit. Check gas valve operation. Ensure that induced-draft blower wheel is properly secured to motor shaft. Inspect heat exchanger. Reset unit at unit disconnect. |
| Internal control fault (LED 8 flashes) | Microprocessor has sensed an error in the software or hardware. | If error code is not cleared by resetting unit power, replace the IGC*. |
| Temporary 1 hr auto reset[1] (LED 9 flashes) | Electrical interference impeding IGC software | Reset 24-v. to control board or turn thermostat off, then on again. Fault will automatically reset itself in one (1) hour. |

***WARNING ⚠:** If the IGC must be replaced, be sure to ground yourself to dissipate any electrical charge that my be present before handling new control board. The IGC is sensitive to static electricity and my be damaged if the necessary precautions are not taken.

**IMPORTANT**: Refer to Table 24-Troubleshooting Guide-Heating for additional troubleshooting analysis.

**LEGEND**

IGC—Integrated Gas Unit Controller

LED—Light-Emitting Diode

**Table 23 – Troubleshooting Chart for Two-Stage Cooling or Heat Pump**

| Symptom | Cause | Remedy |
|---|---|---|
| Compressor and condenser fan will not start. | Power failure | Call power company |
| | Fuse blown or circuit breaker tripped | Replace fuse or reset circuit breaker |
| | Defective contactor, transformer, or high-pressure, loss-of-charge or low-pressure switch | Replace component |
| | Insufficient line voltage | Determine cause and correct |
| | Incorrect or faulty wiring | Check wiring diagram and rewire correctly |
| | Thermostat setting too high | Lower thermostat temperature setting below room temperature |
| Compressor will not start but condenser fan runs | Faulty wiring or loose connections in compressor circuit | Check wiring and repair or replace |
| | Compressor motor burned out, seized, or | Determine cause |
| | internal overload open | Replace compressor |
| | Defective run/start capacitor, overload, start relay | Determine cause and replace |
| | One leg of 3-phase power dead | Replace fuse or reset circuit breaker<br>Determine cause |
| | Low input voltage | Determine cause and correct |
| Three-phase scroll compressor | Scroll compressor is rotating in the wrong direction | Correct the direction of rotation by reversing the |
| makes excessive noise, and there may be a low pressure differential. | | 3-phase power leads to the unit. Shut down unit to allow pressures to equalize. |
| Compressor cycles (other than normally satisfying thermostat) | Refrigerant overcharge or undercharge | Recover refrigerant, evacuate system, and recharge to capacities shown on rating plate |
| | Defective compressor | Replace and determine cause |
| | Insufficient line voltage | Determine cause and correct |
| | Blocked outdoor coil | Determine cause and correct |
| | Defective run/start capacitor | Determine cause and replace |
| | Faulty outdoor fan motor or capacitor | Replace |
| | Restriction in refrigerant system | Locate restriction and remove |
| Compressor operates continuously | Dirty air filter | Replace filter |
| | Unit undersized for load | Decrease load or increase unit size |
| | Thermostat temperature set too low | Reset thermostat |
| | Low refrigerant charge | Locate leak, repair, and recharge |
| | Air in system | Recover refrigerant, evacuate system, and recharge |
| | Outdoor coil dirty or restricted | Clean coil or remove restriction |
| Excessive head pressure | Dirty air filter | Replace filter |
| | Dirty condenser coil | Clean coil |
| | Refrigerant overcharged | Recover excess refrigerant |
| | Air in system | Recover refrigerant, evacuate system, and recharge |
| | Condenser air restricted or air short-cycling | Determine cause and correct |
| Head pressure too low | Low refrigerant charge | Check for leaks, repair, and recharge. |
| | Restriction in liquid tube | Remove restriction |
| Excessive suction pressure | Refrigerant overcharged | Recover excess refrigerant |
| Suction pressure too low | Dirty air filter | Replace filter |
| | Low refrigerant charge | Check for leaks, repair and recharge |
| | Metering device or low side restricted | Remove source of restriction |
| | Insufficient evaporator airflow | Increase air quantity<br>Check filter–replace if necessary |
| | Temperature too low in conditioned area | Reset thermostat |
| | Outdoor ambient below 55°F (13°C) | Install low-ambient kit |
| | Filter drier restricted | Replace filter |

**Table 24 – Troubleshooting Guide–Heating for Two-Stage Gas**

| Symptom | Cause | Remedy |
|---|---|---|
| Burners will not ignite | Water in gas line | Drain. Install drip leg. |
| | No power to furnace | Check power supply fuses, wiring or circuit breaker. |
| | No 24-v power supply to control circuit | Check transformer.<br>NOTE: Some transformers have internal over-current protection that requires a cool-down period to reset. |
| | Mis-wired or loose connections | Check all wiring and wire nut connections |
| | Misaligned spark electrodes | Check flame ignition and sense electrode positioning. Adjust as necessary. |
| | No gas at main burners | 1. Check gas line for air. Purge as necessary. NOTE: After purging gas line of air, wait at least 5 minutes for any gas to dissipate before attempting to light unit.<br>2. Check gas valve. |
| Inadequate heating | Dirty air filter | Clean or replace filter as necessary |
| | Gas input to furnace too low | Check gas pressure at manifold match with that on unit nameplate |
| | Unit undersized for application | Replace with proper unit or add additional unit |
| | Restricted airflow | Clean or replace filter. Remove any restriction. |
| | Limit switch cycles main burners | Check rotation of blower, temperature rise of unit. Adjust as necessary. |
| Poor flame characteristics | Incomplete combustion results in: Aldehyde odors, carbon monoxide, sooting flame, floating flame | 1. Tighten all screws around burner compartment<br>2. Cracked heat exchanger. Replace.<br>3. Unit over-fired. Reduce input (change orifices or adjust gas line or manifold pressure).<br>4. Check burner alignment.<br>5. Inspect heat exchanger for blockage. Clean as necessary. |

**Table 25 – Troubleshooting Guide–LED Status Codes for Two-Stage Gas**

| Symptom | Cause | Remedy |
|---|---|---|
| No Power or Hardware failure (LED OFF) | Loss of power to control module (IGC)*. | Check 5-amp fuse son IGC*, power to unit, 24-v circuit breaker, and transformer. Units without a 24-v circuit breaker have an internal overload in the 24-v transformer. If the overload trips, allow 10 minutes for automatic reset. |
| Check fuse, low voltage circuit (LED 1 flash) | Fuse is blown or missing or short circuit in secondary (24VAC) wiring. | Replace fuse if needed. Verify no short circuit in low voltage (24 VAC wiring). |
| Limit switch faults (LED 2 flashes) | High temperature limit switch is open. | Check the operation of the indoor (evaporator) fan motor. Ensure that the supply-air temperature rise is in accordance with the range on the unit nameplate. Clean or replace filters. |
| Flame sense fault (LED 3 flashes) | The IGC* sensed flame that should not be present. | Reset unit. If problem persists, replace control board. |
| 4 consecutive limit switch faults (LED 4 flashes) | Inadequate airflow to unit. | Check the operation of the indoor (evaporator) fan motor and that supply-air temperature rise agrees with range on unit nameplate information. |
| Ignition lockout fault (LED 5 flashes) | Unit unsuccessfully attempted ignition for 15 minutes. | Check ignitor and flame sensor electrode spacing, gaps, etc. Ensure that fame sense and ignition wires are properly terminated. Verify that unit is obtaining proper amount of gas. |
| Pressure Switch fault (LED 6 flashes) | Open pressure switch. | Verify wiring connections to pressure switch and inducer motor. Verify pressure switch hose is tightly connected to both inducer housing and pressure switch. Verify inducer wheel is properly attached to inducer motor shaft. Verify inducer motor shaft is turning. |
| Rollout switch fault (LED 7 flashes) | Rollout switch has opened. | Rollout switch will automatically reset, but IGC* will continue to lockout unit. Check gas valve operation. Ensure that induced-draft blower wheel is properly secured to motor shaft. Inspect heat exchanger. Reset unit at unit disconnect. |
| Internal control fault (LED 8 flashes) | Microprocessor has sensed an error in the software or hardware. | If error code is not cleared by resetting unit power, replace the IGC*. |
| Temporary 1 hr auto reset[1] (LED 9 flashes) | Electrical interference impeding IGC software | Reset 24-v. to control board or turn thermostat off, then on again. Fault will automatically reset itself in one (1) hour. |

***WARNING ⚠:** If the IGC must be replaced, be sure to ground yourself to dissipate any electrical charge that my be present before handling new control board. The IGC is sensitive to static electricity and my be damaged if the necessary precautions are not taken.

**IMPORTANT**: Refer to Table 24-Troubleshooting Guide-Heating for additional troubleshooting analysis.

**LEGEND**

IGC—Integrated Gas Unit Controller

LED—Light-Emitting Diode

© 2021 Carrier. All rights reserved.
A Carrier Company
Edition Date: 03/21
**Catalog No: SM10-11**
Replaces:SM10-10
**Manufacturer reserves the right to change, at any time, specifications and designs without notice and without obligations.**