40MBDQ
DUCTED SLIM DUCTLESS SYSTEM
SIZES 09 TO 58

Product Data

NOTE: Images for illustration purposes only. Actual models may be slightly different.

TABLE OF CONTENTS

PAGE

MODEL NUMBER NOMENCLATURE 3
STANDARD FEATURES AND ACCESSORIES 4
DIMENSIONS 5
INSTALLATION CLEARANCES 7
MAINTENANCE CLEARANCES 7
SPECIFICATIONS 8
APPLICATION DATA 9
WIRING 9
WIRING DIAGRAMS 12
GUIDE SPECIFICATIONS 15

INDUSTRY LEADING FEATURES / BENEFITS

A PERFECT BALANCE BETWEEN BUDGET LIMITS, ENERGY SAVINGS AND COMFORT.

The 40MBDQ series ducted slim ductless systems are a matched combination of an outdoor condensing unit and an indoor fan coil unit connected only by refrigerant tubing and wires.

The fan coil is mounted in the ceiling. This selection of fan coils permits creative solutions to design problems such as:

- Add−ons to current space (an office or family room addition)
- Special space requirements
- When changes in the load cannot be handled by the existing system.
- Historical renovations or any application where preserving the look of the original structure is essential.

These compact indoor fan coil units take up very little space above the ceiling. Advanced system components incorporate innovative technology to provide reliable cooling performance at low sound levels.

LOW SOUND LEVELS

When noise is a concern, the ductless split systems are the answer. The indoor units are whisper quiet. There are no compressors indoors, either in the conditioned space or directly over it, and there is none of the noise usually generated by air being forced through ductwork.

SECURE OPERATION

If security is an issue, outdoor and indoor units are connected only by refrigerant piping and wiring to prevent intruders from crawling through ductwork. In addition, since outdoor units can be installed close to an outside wall, coils are protected from vandals and severe weather.

FAST INSTALLATION

This compact ductless system is simple to install. A mounting bracket and duct work is needed for the indoor units, and only wire and piping need run between the indoor and outdoor units. These units are fast and easy to install ensuring minimal disruption to customers in the home or workplace. This makes the ducted style ductless systems the equipment of choice, especially in retrofit situations.

SIMPLE SERVICING AND MAINTENANCE

Removing the top panel on outdoor units provides immediate access to the control compartment, providing a service technician access to check unit operation. In addition, the draw−thru design of the outdoor section means that dirt accumulates on the outside surface of the coil. Coils can be cleaned quickly from the inside using a pressure hose and detergent.

On all indoor units, service and maintenance expense is reduced due to easy accessible service panels. In addition, these ducted systems have extensive self−diagnostics to assist in troubleshooting.

BUILT−IN RELIABILITY

Ducted style ductless system indoor and outdoor units are designed to provide years of trouble−free operation.

The ducted indoor units include protection against freeze−up and high evaporator temperatures on heat pumps.

The condensing units on heat pumps are protected by a three minute time delay before the compressor starts the over−current protection and the high temperature protection.

INDIVIDUAL ROOM COMFORT

Maximum comfort is provided because each space can be controlled individually based on usage pattern. The air sweep feature provided permits optimal room air mixing to eliminate hot and cold spots for occupant comfort. In addition, year−round comfort can be provided with heat pumps.

ECONOMICAL OPERATION

The ducted style ductless system design allows individual or multi−room heating or cooling when required. There is no need to run large supply−air fans or chilled water pumps to handle a few spaces with unique load patterns.

EASY−TO−USE CONTROLS

The ducted units have microprocessor−based controls to provide the ultimate in comfort and efficiency. The user friendly wired and wireless remote control provides the interface between user and the unit.

BUILT−IN CONDENSATE LIFT PUMP

Factory installed condensate lift pump on the ducted fan coil provides installation flexibility.

OPTIONAL WIRED CONTROLLER

Timer Function

STANDARD WIRED CONTROLLER

7 Day Programmable

AGENCY LISTINGS

All systems are listed with AHRI (Air Conditioning, Heating & Refrigeration Institute), and ETL.

MODEL NUMBER NOMENCLATURE

INDOOR UNIT

40 **MB** **D** **Q** **09** **–** **– –** **3**

40 = FAN COIL UNIT

MB = MODEL

INDOOR FAN COIL TYPE
D = DUCTED STYLE

SYSTEM TYPE
Q = HEAT PUMP

NOMINAL CAPACITY
09 – 1/4 TON
12 – 1/4 TON
18 – 1–1/2 TONS
24 – 2 TONS
36 – 3 TONS
48 – 4 TONS
58 – 5 TONS

VOLTAGE
3 = 208/230–1–60

NOT USED

NOT USED

Use of the AHRI Certified TM Mark indicates a manufacturer's participation in the program For verification of certification for individual products, go to www.ahridirectory.org.

STANDARD FEATURES AND ACCESSORIES

Ease Of Installation	
Mounting Brackets	S
Low Voltage Controls	S
Comfort Features	
Rear or Bottom Return (Bottom Return only sizes 09−48)	S
Vertical or horizontal installation (Vertical only sizes 09−48)	S
Microprocessor Controls	S
Wired Remote Control (7 Day Programmable KSACN0501AAA)	S
Wireless Remote Control	S
Auto Restart Function	S
Cold Blow Protection On Heat Pumps	S
Freeze Protection Mode On Heat Pumps	S
Turbo Mode	S
Auto Changeover On Heat Pumps	S
Follow Me *(Sense Temperature at remote)*	S
Energy Saving Features	
Outside Air Intake	S
Sleep Mode	S
Stop/Start Timer	S
46°F Heating Mode (Heating Setback)	S
Safety And Reliability	
Indoor Coil Freeze Protection	S
Indoor Coil High Temp Protection in Heating Mode	S
Aluminum Golden Hydrophilic pre−coated fins	S
Ease Of Service And Maintenance	
Cleanable Filters	S
Diagnostics	S
Liquid Line Pressure Taps	S
Application Flexibility	
Built−in Condensate Lift Pump	S

Legend
S Standard
A Accessory

ACCESSORIES

ORDERING NO.	DESCRIPTION	FOR MODELS
KSACN0101AAA	Optional Wired Remote Control with Timer Function	All Sizes
KSAIF0401AAA	Wi−Fi Kit	All Sizes

DIMENSIONS

		OUTLINE DIMENSIONS				AIR OUTLET OPENING SIZE				AIR RETURN OPENING SIZE			HANGER BRACKERS		REFRIGERANT PIPE LOCATIONS				OPERATING WEIGHT lb (kg)
Size	Unit	A	B	C	D	E	F	G	H	I	J	K	L	M	H1	H2	W1	W2	
9	In.	27.6	7.9	19.9	17.7	5.4	21.1	1.2	6	23.6	7.3	2	29.2	14.2	3.3	5.5	3.3	3.3	40
	mm	700	200	506	450	137	537	30	152	599	186	50	741	360	84	140	84	84	18.1
12	In.	27.6	7.9	19.9	17.7	5.4	21.1	1.2	6	23.6	7.3	2	29.2	14.2	3.3	5.5	3.3	3.3	40
	mm	700	200	506	450	137	537	30	152	599	186	50	741	360	84	140	84	84	18.1
18	In.	34.65	8.27	26.54	23.62	5.51	27.80	1.97	5.35	30.79	7.48	1.57	36.22	20	3.07	5.83	3.46	4.41	54
	mm	880	210	674	600	140	706	50	136	782	190	40	920	508	78	148	88	112	24.5
24	In.	43.31	9.8	30.47	27.56	5.51	36.46	1.97	6.89	39.41	8.98	0.2	44.88	23.54	3.15	5.91	5.12	6.1	87
	mm	1100	249	774	700	140	926	50	175	1001	228	5	1140	598	80	150	130	155	39.4
36	In.	53.54	9.8	30.47	27.56	5.51	46.69	1.97	6.89	49.65	8.98	0.2	55.12	23.54	3.15	5.91	5.12	6.1	106
	mm	1360	249	774	700	140	1186	50	175	1261	228	5	1400	598	80	150	130	155	48.3
48	In.	47.24	11.81	34.41	31.5	4.84	41.1	1.97	8.94	43.35	11.02	0.2	48.82	27.44	3.15	5.91	7.28	8.27	120
	mm	1200	300	874	800	123	1044	50	227	1101	280	5	1240	697	80	150	185	210	54.3
58	In.	55.12	17.32	33.78	30.31	4.17	46.81	1.1	15.16	46.54	11.02	1.57	56.57	27.56	8.15	10.75	5.67	5.67	163
	mm	1400	440	858	770	106	1189	28	385	1182	280	40	1437	700	207	273	144	144	74

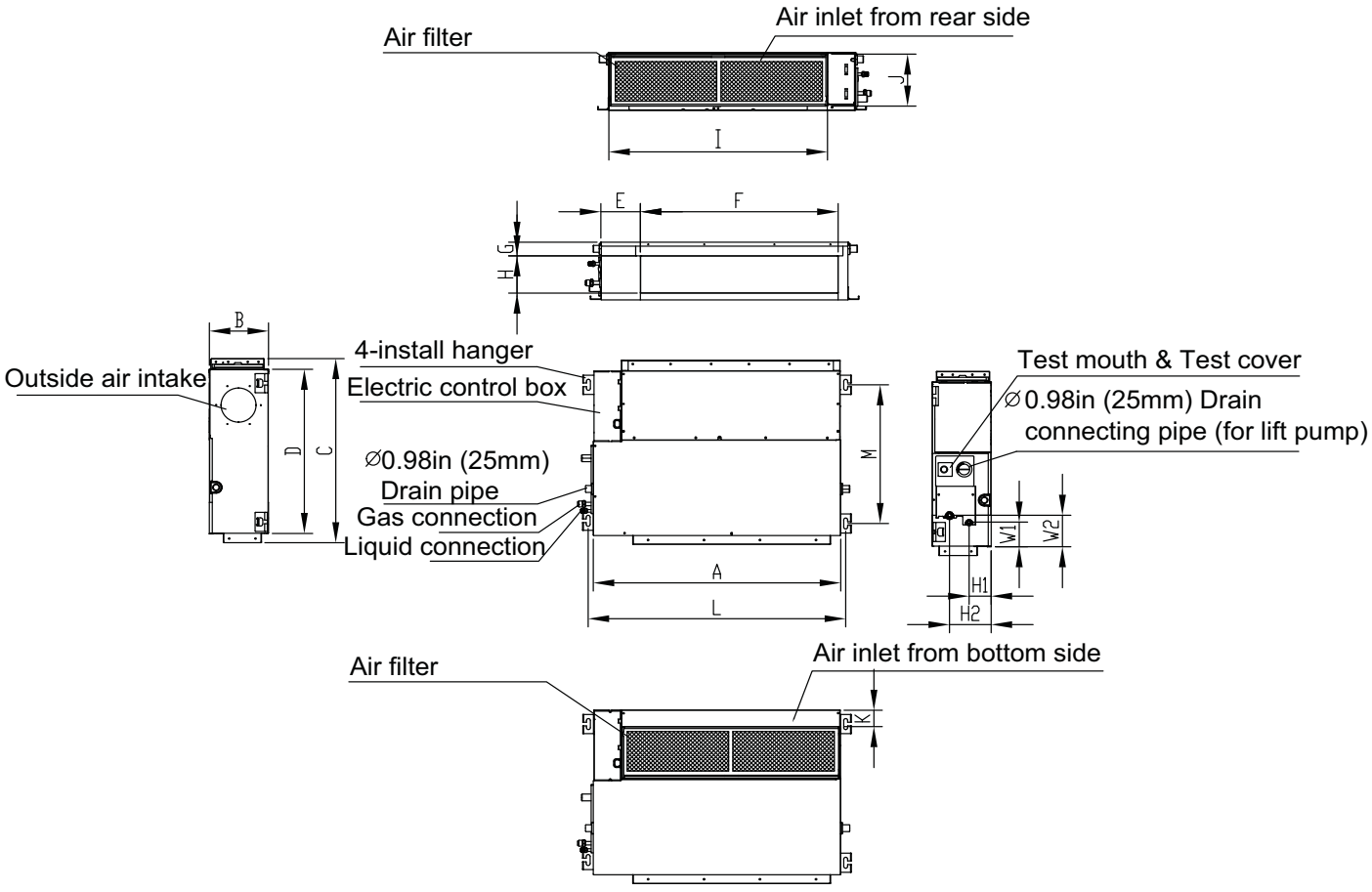

Fig. 1 – Indoor Unit Sizes 9K − 48K

DIMENSIONS − (CONT)

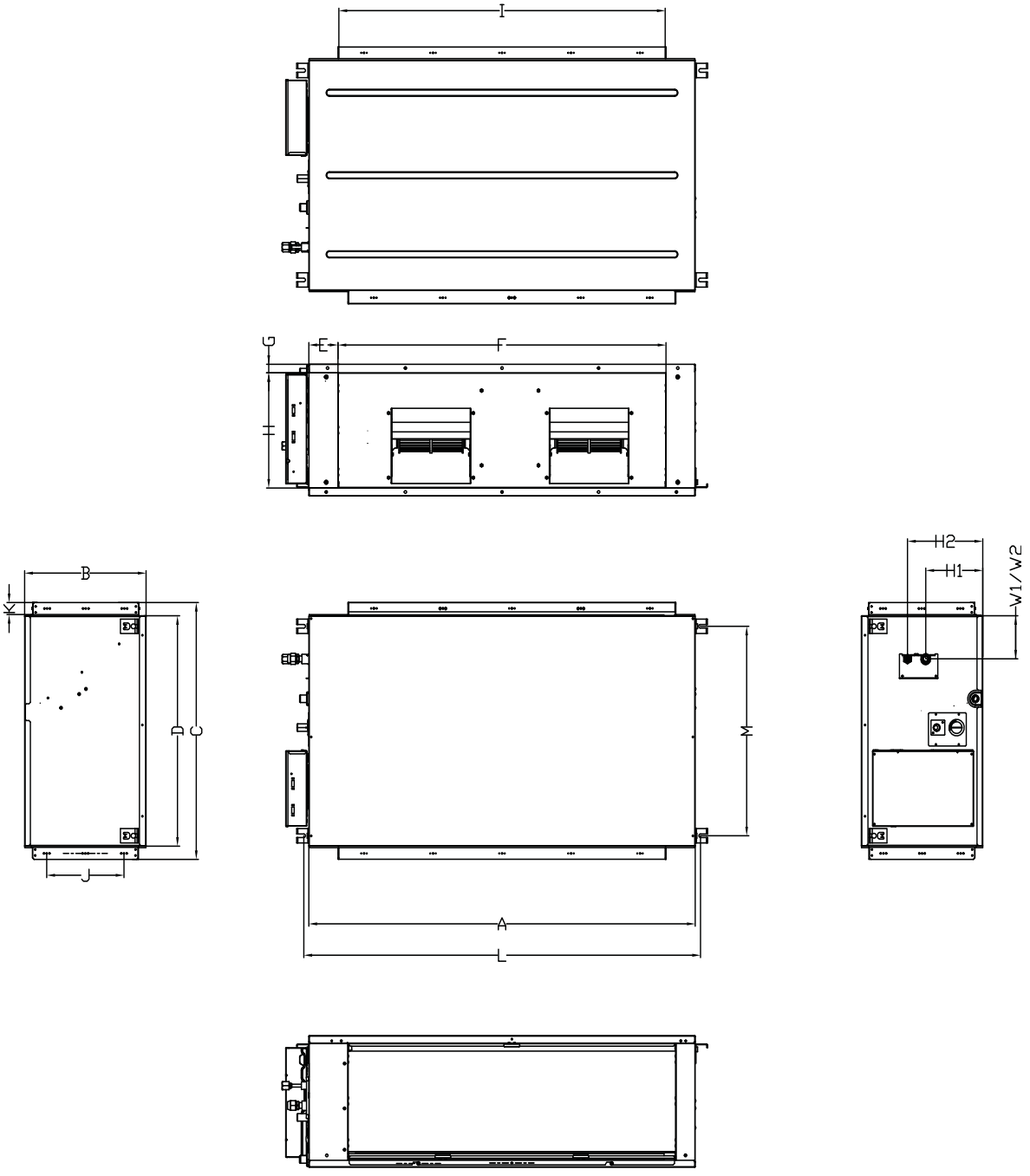

Fig. 2 – Indoor Unit Sizes 58K

INSTALLATION CLEARANCES

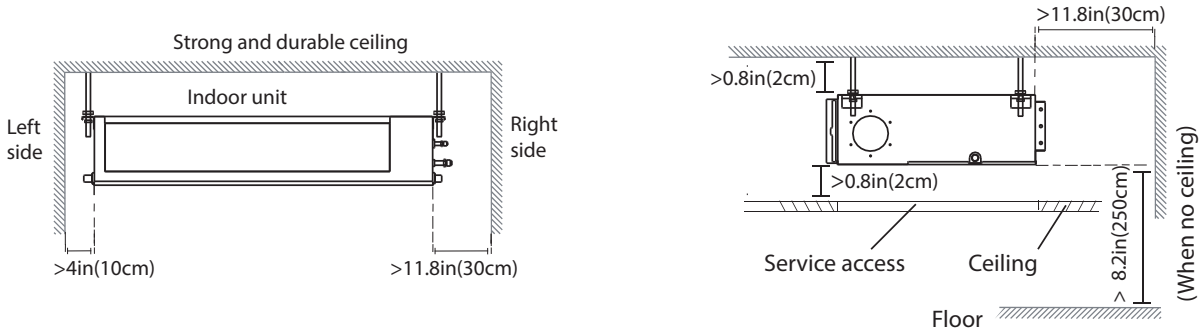

Fig. 3 – Installation Clearances

MAINTENANCE CLEARANCES

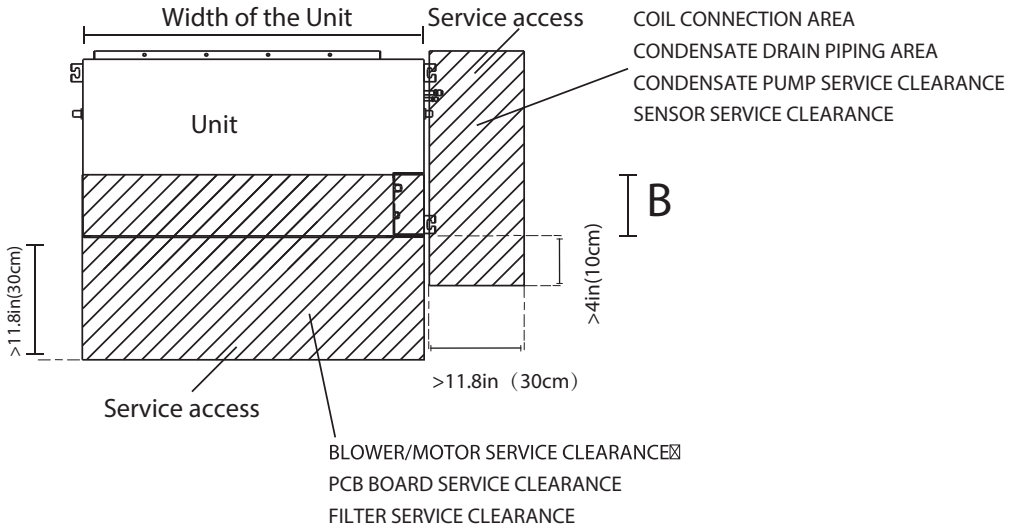

Fig. 4 – Maintenance Clearances

Table 1—Maintenance Clearances

Capacity (Kbtu)	B
9K	11.81in.(30cm)
12K	11.81in.(30cm)
18K	11.81in.(30cm)
24K	11.81in.(30cm)
36K	11.81in.(30cm)
48K	15.75in.(40cm)
58K	15.75in.(40cm)

SPECIFICATIONS

Heat Pump									
System	**Size**		**09K**	**12K**	**18K**	**24K**	**36K**	**48K**	**58K**
	Indoor Model		40MBDQ09−−−3	40MBDQ12−−−3	40MBDQ18−−−3	40MBDQ24−−−3	40MBDQ36−−−3	40MBDQ48−−−3	40MBDQ58−−−3
Electrical	Voltage, Phase, Cycle	V/Ph/Hz	208/230−1−60	208/230−1−60	208/230−1−60	208/230−1−60	208/230−1−60	208/230−1−60	208/230−1−60
	Power Supply		Indoor unit powered from outdoor unit						
	MCA	A.	1.11	1.11	1.2	1.2	2.45	3.2	3.65
Controls	Wireless Remote Controller (° F/° C Convertible)		Standard	Standard	Standard	Standard	Standard	Standard	Standard
	Wired Remote Controller (° F/° C Convertible)		Standard	Standard	Standard	Standard	Standard	Standard	Standard
Operating Range	Cooling Indoor DB Min−Max	° F (° C)	63~90(17~32)	63~90(17~32)	63~90(17~32)	63~90(17~32)	63~90(17~32)	63~90(17~32)	63~90 (17~32)
	Heating Indoor DB Min−Max	° F (° C)	32~86 (0~30)	32~86 (0~30)	32~86(0~30)	32~86(0~30)	32~86(0~30)	32~86(0~30)	32~86 (0~30)
Piping	Pipe Connection Size−Liquid	in (mm)	1/4 (6.35)	1/4 (6.35)	1/4(6.35)	3/8(9.52)	3/8(9.52)	3/8(9.52)	3/8 (9.52)
	Pipe Connection Size−Suction	in (mm)	3/8 (9.52)	1/2 (12.7)	1/2(12.7)	5/8(16)	5/8(16)	5/8(16)	3/4 (19)
Indoor	Unit Width	in (mm)	27.559(700)	27.559(700)	34.65(880)	43.31(1100)	53.54(1360)	47.24(1200)	55.12 (1400)
	Unit Height	in (mm)	7.874(200)	7.874(200)	8.27(210)	9.8(249)	9.8(249)	11.81(300)	17.32 (440)
	Unit Depth	in (mm)	19.92(506)	19.92(506)	26.54(674)	30.47(774)	30.47(774)	34.41(874)	33.78 (858)
	Net Weight	lbs (kg)	43.56(19.8)	43.56(19.8)	54(24.5)	86.86(39.4)	106.48(48.3)	119.71(54.3)	163 (74)
	Fan Speeds		3	3	3	3	3	3	3
	Airflow (lowest to highest)	CFM	147/211/264	177/283/353	300/400/480	440/700/780	700/910/1080	720/1030/1230	1260/1710/2150
	Sound Pressure (lowest to highest)	dB(A)	30/34/38	35/37/38	35/37/39	35.5/40/44	38.5/42/45.5	46/49.5/50.5	51/54/57
	Max Static Pressure	In.WG.	0.2	0.2	0.40	0.64	0.64	0.64	0.80
	Field Drain Pipe Size O.D.	in (mm)	1(25.4)	1(25.4)	1(25.4)	1(25.4)	1(25.4)	1(25.4)	1 (25.4)

Performance may vary based on the outdoor unit matched to. See the compatible outdoor units product data for Performance Data.

COMPATIBILITY

Unit Size	**40MBDQ09−−−3**	**40MBDQ12−−−3**	**40MBDQ18−−−3**	**40MBDQ24−−−3**	**40MBDQ36−−−3**	**40MBDQ48−−−3**	**40MBDQ58−−−3**
Outdoor Unit Single Zone	38MAQB09R−−3	38MAQB12R−−3	38MAQB18R−−3	38MAQB24R−−3	38MBRQ36A−−3	38MBRQ48A−−3	38MBRQ58A−−3
Outdoor Unit Multi−zone	38MGRQ24C−−3						
	38MGRQ30D−−3						
	38MGRQ36D−−3						
	38MGRQ48E−−3						

NOTE: Backward compatible with Single Zone Systems 38MAQ sizes 09−24, 38MBQ Sizes 36−48 and Multi−zone Systems 38MGQ.

APPLICATION DATA

UNIT SELECTION

Select equipment to either match or that can handle slightly less than the anticipated peak load. This provides better humidity control, fewer unit cycles, and less part−load operation.

For units used in spaces with high sensible loads, base equipment selection on unit sensible load, not on a total anticipated load. Adjust for anticipated room wet bulb temperature to avoid undersizing equipment.

UNIT MOUNTING (INDOOR)

Refer to unit Installation Instructions for further details.

Unit leveling − For reliable operation, units should be level in all planes.

Clearance − Provide adequate clearance for airflow as shown in Fig. 3.

Unit location − Select a location which provides the best air circulation for the room.

These units should be positioned as accessible as possible above the ceiling. The unit return and discharge should not be obstructed by furniture, curtains, or anything which may cause unit short cycling or air recirculation. Duct the unit in the middle of the selected wall (if possible). Duct towards an outside wall, if available, to make piping easier, and place the unit so it faces the normal location of room occupants.

UNIT MOUNTING (OUTDOOR)

Refer to unit Installation Instructions for further details.

Do not install the indoor or outdoor units in a location with special environmental conditions. For those applications, contact your ductless representative.

MOUNTING

Refer to unit's Installation Instructions for further details.

SUPPORT

Adequate support must be provided to support the weight of all fan coils. Refer to the *Physical Data* section for fan coil weights, and the base unit dimensional drawings for the location of mounting brackets.

SYSTEM OPERATING CONDITIONS

OPERATING RANGE Min / Max °F (°C)		
	Cooling	**Heating**
Indoor DB	63 / 90 (17 / 32)	32 / 86 (0 / 30)
Indoor WB	59 / 84 (15 / 29)	

NOTE: Reference the product Installation Instructions for more information.

DRAIN CONNECTIONS

Install drains to meet local sanitation codes. The standard ducted fan coil unit condensate lift pump has a maximum lift of 29.5 in. (750mm).

WIRING

All wires must be sized per NEC (National Electrical Code) or CEC (Canadian Electrical Code) and local codes. Use Electrical Data table MCA (minimum circuit amps) and MOCP (maximum over current protection) to correctly size the wires and the disconnect fuse or breakers respectively.

Recommended Connection Method for Power and Communication Wiring:

The main power is supplied to the outdoor unit. The field supplied 14/3 stranded wire with ground with a 600 volt insulation rating, power/communication wiring from the outdoor unit to indoor unit consists of four (4) wires and provides the power for the indoor unit. Two wires are line voltage AC power, one is communication wiring (S) and the other is a ground wire. Wiring between indoor and outdoor unit is polarity sensitive. The use of BX wire is NOT recommended.

If installed in a high Electromagnetic field (EMF) area and communication issues exists, a 14/2 stranded shielded wire can be used to replace L2 and (S) between outdoor unit and indoor unit landing the shield onto ground in the outdoor unit only.

⚠ CAUTION

EQUIPMENT DAMAGE HAZARD

Failure to follow this caution may result in equipment damage or improper operation.

Wires should be sized based on NEC and local codes.

⚠ CAUTION

EQUIPMENT DAMAGE HAZARD

Failure to follow this caution may result in equipment damage or improper operation.

Be sure to comply with local codes while running wire from the indoor unit to the outdoor unit.

Every wire must be connected firmly. Loose wiring may cause the terminal to overheat or result in unit malfunction. A fire hazard may also exist. Ensure all wiring is tightly connected.

No wire should touch the refrigerant tubing, compressor or any moving parts.

Disconnecting means must be provided and shall be located within sight and readily accessible from the air conditioner.

Connecting cable with conduit shall be routed through the hole in the conduit panel.

CONTROL SYSTEM

The indoor unit is equipped with a microprocessor control to perform two functions:

1. Provide safety for the system
2. Control the system and provide optimum levels of comfort and efficiency

The main microprocessor is located on the control board of the fan coil unit (outdoor units have a microprocessor also) with thermistors located in the fan coil air inlet and on the indoor coil. Heat pump units have a thermistor on the outdoor coil. These thermistors monitor the system operation to maintain the unit within acceptable parameters and control the operating mode.

WIRELESS REMOTE CONTROL

Fig. 5 – Wireless Remote Control

1. A wireless remote control is supplied for system operation for system operation of all ducted units.
2. Each battery operated wireless (infrared) remote control may be used to control more than one unit.

WIRED REMOTE CONTROL

P/N KSACN0101AAA (optional available as an accessory)

P/N KSACN0501AAA (included with the Unit)

1. Wired remote controller used for system operation of all ducted units.
2. Kit includes a wired remote controller and a connecting cable.

NOTE: Extension wire available through RCD (KSACN0101AAA Part Number: 17401204001601; KSACN0501AAA Part Number: 17401204000769).

3. Connect with wire terminal between remote controller and indoor unit.
4. Display in °F or °C and temperature increments every 1°F or every 1°C.

Fig. 6 – KSACN0101AAA (Timer Function)

Fig. 7 – KSACN0501AAA (7 Day Programmable)

AIR FLOW DATA

System Size		9K	12K	18K	24K	36K	48K	58K
Indoor (CFM)	High	264	353	480	780	1080	1230	2150
	Medium	211	282.5	400	700	910	1030	1710
	Low	147	176.5	300	440	700	720	1260

SOUND PRESSURE

System Size		9K (208/230V)	12K (208/230V)	18K (208/230V)	24K (208/230V)	36K (208/230V)	48K (208/230V)	58K (208/230V)
Cooling operation Indoor Sound Pressure	dBa at (High/Med/Low CFM)	38/34/30	39/37/35	39/37/35	44/40/35.5	45.5/42/38.5	50.5/49.5/46	58.3/57.3/53.9/51.2
Heating operation Indoor Sound Pressure	dBa at (High/Med/Low CFM)	39/35/31	37/36/34	37/36/34	41.9/39.2/36.7	45.4/43/39.4	50.1/48.5/45.3	56.9/56.9/53.7/50.6

SOUND PRESSURE TESTING METHOD

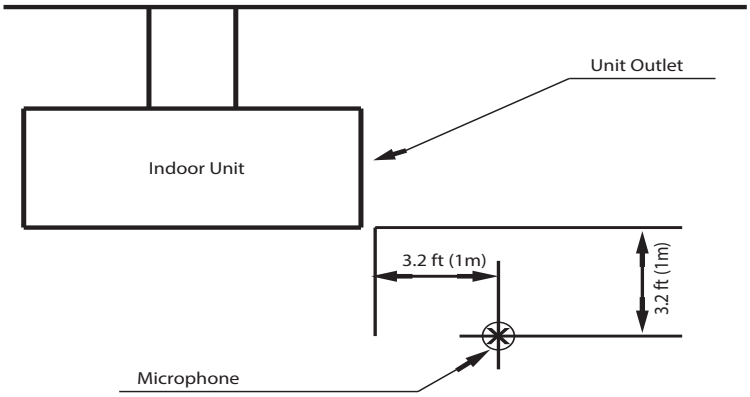

Fig. 8 – Sound Pressure Testing Method

SOUND POWER

System sSize		9K (208/230V)	12K (208/230V)	18K (208/230V)	24K (208/230V)	36K (208/230V)	48K (208/230V)	58K (208/230V)
Cooling Operation Indoor Sound Power	dBA (@ High CFM)	55.4	59.5	64	66.9	69.6	70.4	76.2
Heating Operation Indoor Sound Power	dBA (@ High CFM)	60.2	63.3	62.6	68.2	70.8	71.6	74.1
Cooling Operation Indoor Sound Power (Turbo Mode)	dBA (@ High CFM)	54.4	58.5	63	65.9	68.6	69.4	75.2
Heating Operation Indoor Sound Power (Turbo Mode)	dBA (@ High CFM)	59.2	62.3	61.6	67.2	69.8	70.6	73.1

FAN AND MOTOR SPECIFICATIONS

	Ducted		9K (208/230V)	12K (208/230V)	18K (208/230V)	24K (208/230V)	36K (208/230V)	48K (208/230V)	58K (208/230V)
Indoor Fan	Material		Plastic	Plastic	Metal	Metal	Metal	Metal	Metal
	Type		LX−154*158* 15−41J	LX−154*158* 15−41J	FLBJ−150*158* 12−41	FLBJ−200*198* 12−46	FLBJ−200*266* 12.7−46	FLBJ−230*264* 12.7−40	FLBJ−227*234* 12.7−43
	Diameter	inch	5.9	5.9	6.06 inch	7.87 inch	7.87 inch	9.06 inch	8.94
	Height	inch	5.9	5.9	6.22 inch	7.80 inch	10.47 inch	10.39 inch	9.21
Indoor Fan Motor	Model		ZKFN−55−8−22	ZKFN−55−8−22	ZKFN−160−8−1−2	ZKFN−160−8−1−2	ZKFN−300−8−1	ZKFN−560−8−1−1	ZKFN−700−8−1
	Volts	V	208/230	208/230	208/230	208/230	208/230	208/230	208/230
	Type		DC	DC	DC	DC	DC	DC	DC
	Phase		3	3	3	3	3	3	3
	FLA		1.11	1.11	1.65	1.65	2.45	4.1	3.65
	Insulation class		E	E	E	E	E	E	B
	Safe class		IPX0	IPX0	IPX0	IPX0	IPX0	IPX0	IPX0
	Input	W	130	130	200	200	420	560	1000
	Output	W	55	55	160	160	300	560	700
	Range of current	Amps	1±10%	1±10%	1.2±10%	1.2±10%	2.45±10%	3.2±10%	3.65±10%
	Rated current	Amps	1.11	1.11	1.2	1.2	2.45	3.2	3.65
	Rated HP	HP	0.18	0.18	0.27	0.27	0.56	0.75	0.952
	Speed	rev/ min	1100−1350	1100−1350	850/700/450	880/820/690	1130/1050/990	890/820/840	1060/910/790
	Rated RPM	rev/ min	1350	1350	1300	1300	1280	1020	1060
	Max. input	W	130	130	160	160	420	560	1000

WIRING DIAGRAMS

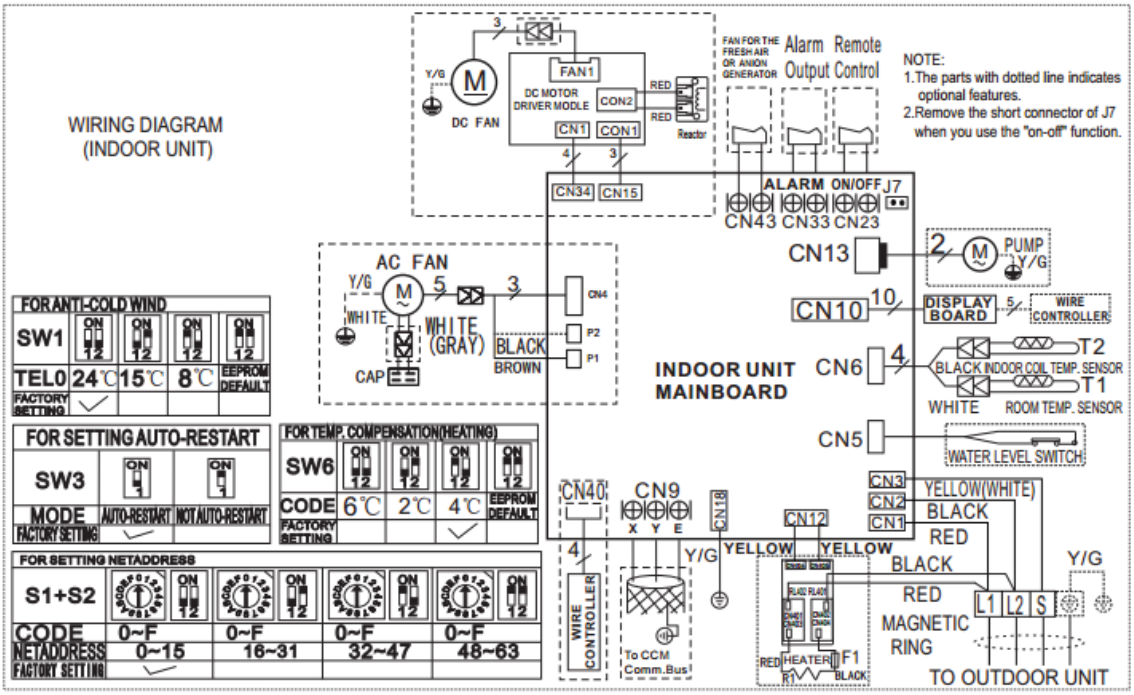

Fig. 9 – Wiring Diagram Size 9K − 24K

Indoor Unit	
Code	**Part Name**
CN1	Input: 230VAC High Voltage Connection of the terminal
CN2	Input: 230VAC High Voltage Connection of the terminal
CN3/CN26	Output: 0V Connection of the earth
CN5	Output: 0−5VDC Connection of the water level switch
CN6	Output: 5VDC Connection of the room and pipe temperature
CN8/CN18	Output: 320VDC High Voltage Connection of the reactor
CN9	Output: 5VDC Connection of the CCM
CN10(CN10A)	Output: 12VDC Connection of the display board
CN12	Output: 220VAC High Voltage Connection of the electrical heater
CN13	Output: 220VAC High Voltage Connection of the pump
CN15	Output: 320VDC High Voltage Connection of the fan board
CN23	Output 1 – 12VDC Connection of the remote switch
CN33	Output: 0V Connection of the alarm
CN40	Output: 12VDC Connection of the wire controller
CN43	Output: 220VAC High Voltage Connection of the fresh air suction fan

WIRING DIAGRAMS (CONT)

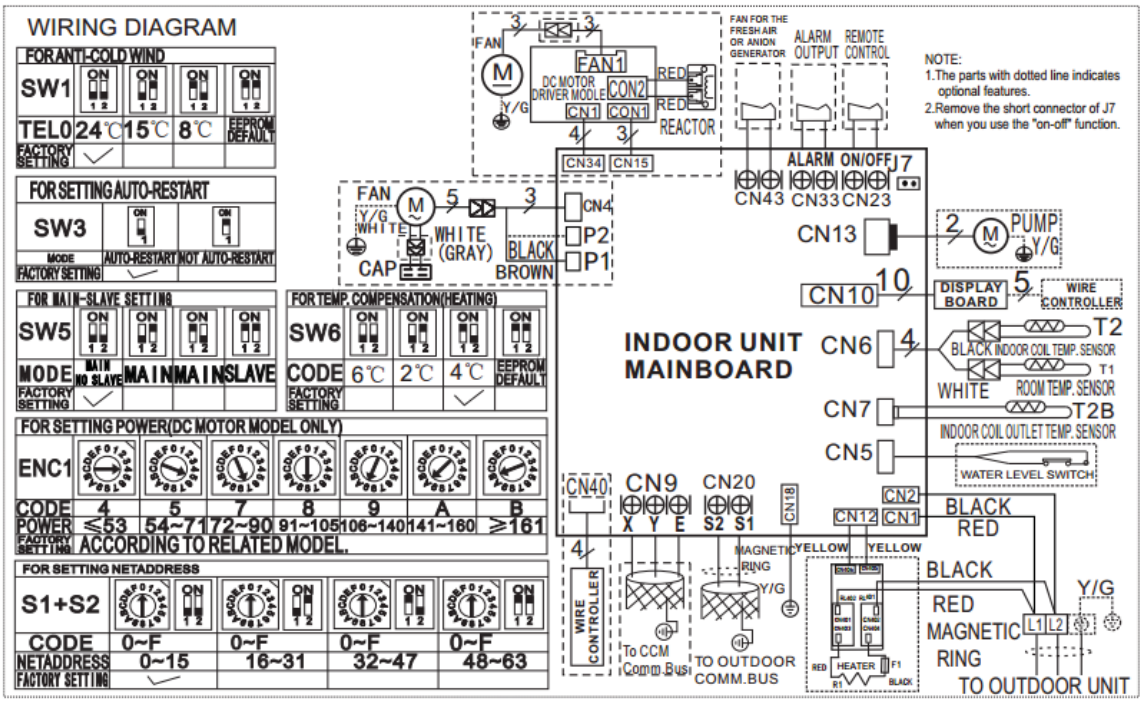

Fig. 10 – Wiring Diagram Size 36K−48K

Indoor Unit	
Code	**Part Name**
CN1	Input: 230VAC High Voltage Connection of the terminal
CN2	Input: 230VAC High Voltage Connection of the terminal
CN5	Output: 0−5VDC Connection of the water level switch
CN6	Output: 5VDC Connection of the room and pipe temperature
CN8/CN18	Output: 320VDC High Voltage Connection of the reactor
CN9	Output: 5VDC Connection of the CCM
CN10(CN10A)	Output: 12VDC Connection of the display board
CN13	Output: 220VAC High Voltage Connection of the pump
CN15	Output: 320VDC High Voltage Connection of the fan board
CN23	Output 1 – 12VDC Connection of the remote switch
CN33	Output: 0V Connection of the alarm
CN40	Output: 12VDC Connection of the wire controller

WIRING DIAGRAMS (CONT)

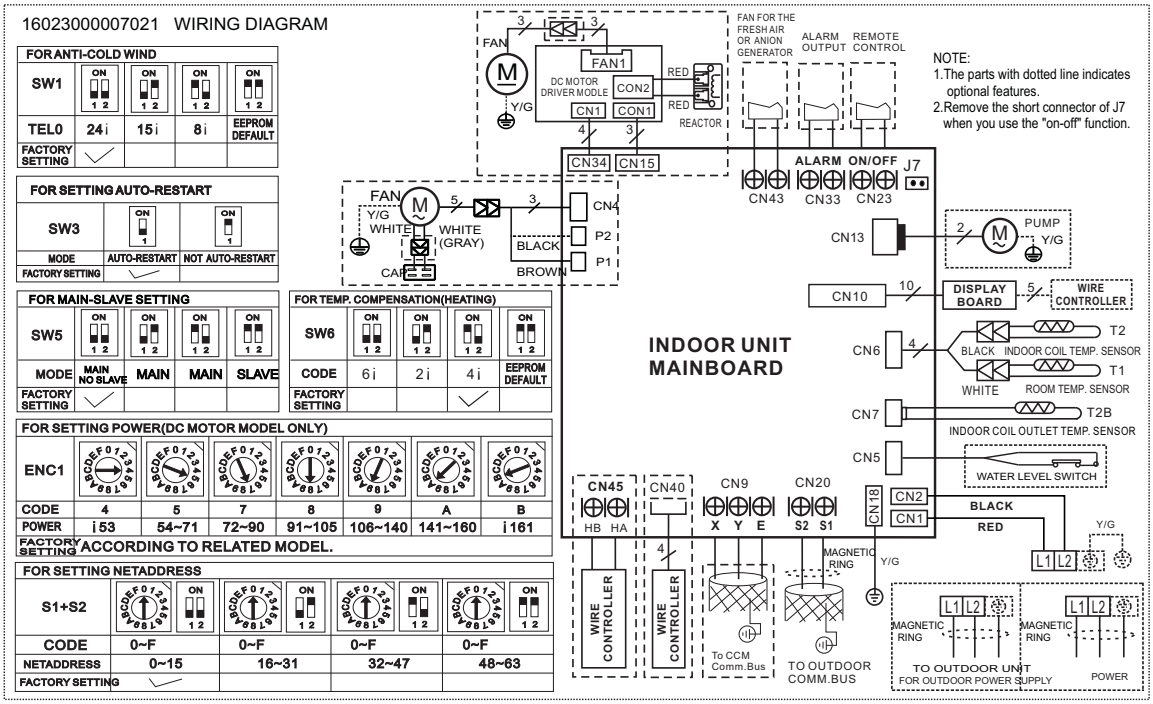

Fig. 11 – Wiring Diagram Size 58

Indoor Unit	
Code	**Part Name**
CN1	Input: 230VAC High Voltage Connection of the terminal
CN2	Input: 230VAC High Voltage Connection of the terminal
CN3/CN26	Output: 0V Connection of the earth
CN5	Output: 0−5VDC Connection of the water level switch
CN6	Output: 5VDC Connection of the room and pipe temperature
CN7	Output: 5VDC Connection of the indoor coil outlet temperature sensor T2B
CN8/CN18	Output: 320VDC High Voltage Connection of the reactor
CN9	Output: 5VDC Connection of the CCM
CN10(CN10A)	Output: 12VDC Connection of the display board
CN13	Output: 220VAC High Voltage Connection of the pump
CN15	Output: 320VDC High Voltage Connection of the fan board
CN23	Output 1 – 12VDC Connection of the remote switch
CN33	Output: 0V Connection of the alarm
CN20	Output: 24VDC between CN2 Connection of the S signal
CN41	Output: 24VDC between CN2 Connection of the S signal
CN43	Output: 220VAC High Voltage Connection of the fresh air suction fan

GUIDE SPECIFICATIONS

INDOOR DUCTED SLIM DUCTLESS UNITS

Size Range: 1/4 to 5 Ton Nominal Cooling and Heating Capacity
Model Number: 40MBDQ

PART 1 − GENERAL

1.01 System Description

Indoor, slim ducted, direct−expansion fan coils are matched with a heat pump outdoor unit.

1.02 Agency Listings

Unit is rated per AHRI Standards 210/240 and listed in the AHRI directory as a matched system.

1.03 Delivery, Storage, And Handling

Units are stored and handled per unit the manufacturer's recommendations.

1.04 Warranty (For Inclusion By Specifying Engineer)

PART 2 − PRODUCTS

2.01 Equipment

A. General:

Indoor, direct−expansion, ceiling−mounted fan coil. The unit is complete with cooling/heating coil, fan, fan motor, piping connectors, electrical controls, microprocessor control system, and integral temperature sensing.

B. Unit Cabinet:

Unit cabinet is constructed of galvanized steel. The cabinet is fully insulated for improved thermal and acoustic performance.

C. Fans:

The fan is tangential direct−drive blower type with air intake at the rear or bottom of the unit and discharge at the front.

D. Coil:

The coil is a copper tube with aluminum fins and galvanized steel tube sheets. The fins are bonded to the tubes by mechanical expansion and specially golden hydrophilic pre−coated for enhanced wet−ability. A drip pan under the coil has a factory installed condensate pump and drain connection for hose attachment to remove condensate.

E. Motors:

The motors has an open drip−proof, permanently lubricated ball bearing with inherent overload protection. Fan motors are 3−speed.

F. Controls:

The controls consist of a microprocessor−based control system which controls the space temperature, determines optimum fan speed, and runs self diagnostics. The temperature control range is 62°F to 86°F (17°C to 30°C) in increments of 1°F or 1°C, and has a 46°F Heating Mode (Heating Setback). The wireless remote controller can act as the temperature sensing location for room comfort.

The unit has the following functions as a minimum:

1. An automatic restart after power failure at the same operating conditions as at failure.
2. A timer function to provide a minimum 24−hour timer cycle for system Auto Start/Stop.
3. Temperature−sensing controls sense return air temperature.
4. Indoor coil freeze protection.
5. Wireless infrared remote control to enter set points and operating conditions.
6. Dehumidification mode provides increased latent removal capability by modulating system operation and set point temperature.
7. Fan−only operation to provide room air circulation when no cooling is required.
8. Diagnostics provide continuous checks of unit operation and warn of possible malfunctions. Error messages appear on the unit.
9. The fan speed control is user−selectable: high, medium, low, or microprocessor controlled automatic operation during all operating modes.
10. Automatic heating−to−cooling changeover in heat pump mode. The control includes deadband to prevent rapid mode cycling between heating and cooling.
11. Indoor coil high temperature protection is provided to detect an excessive indoor discharge temperature when unit is in the heat pump mode.

G. Electrical Requirements:

The indoor fan motor operates on 208−230V. Power is supplied from the outdoor unit.

H. Operating Characteristics:

The 40MBDQ system has a minimum SEER (Seasonal Energy Efficiency Ratio) and HSPF at AHRI conditions, as listed on the specifications table.

I. Refrigerant Lines:

All units have refrigerant lines that can be oriented to connect from the side of the unit. Both refrigerant lines need to be insulated.

©2018 Payne Heating & Cooling Systems • 7310 W. Morris St. • Indianapolis, IN 46231 Edition Date: 04/18

Catalog No: SS—40MBDQ—02

Replaces: SS—40MBDQ—01

Manufacturer reserves the right to change, at any time, specifications and designs without notice and without obligations.