bryant®

Wiring Diagram

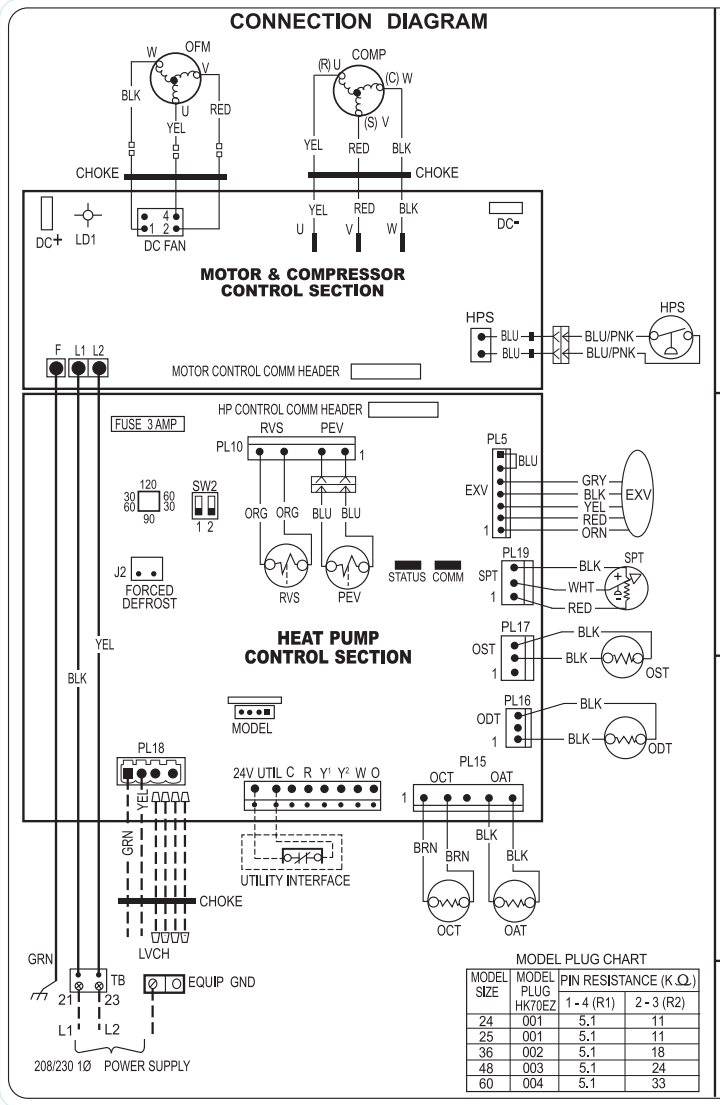

MODEL PLUG CHART

MODEL SIZE	MODEL PLUG HK70EZ	PIN RESISTANCE (K.Ω) 1 - 4 (R1)	2 - 3 (R2)
24	001	5.1	11
25	001	5.1	11
36	002	5.1	18
48	003	5.1	24
60	004	5.1	33

UNIT OPERATION

This control board contains a 3.5 minute short cycle protector. A 3.5 minute delay will occur between Compressor off/on cycles. To bypass delay, short forced defrost pins for 1 second then release. However, there is an additional 2.5 minutes delay upon expiration of the 3.5 minute short cycle delay to ensure the high and low side pressures are equalized. This is important for long term rotary compressor reliability. It is a delay that cannot and must not be bypassed. The internal crankcase heater is energized during off cycle as needed.

- **DEFROST TIME SELECTION -** The Defrost Interval Time Can Be Field Selected, Dependent Upon Local Georgraphic Requirements. It Is Factory Set At 90 Minutes And Can Be Changed To Either 30, 60 Or 120 Minutes Via The User Interface or Dip Switches. However, if changed at outdoor temperature less than 37 °F, the Defrost Interval will be 60 minute maximum unless 30 minute is selected. User Interface Defaults to "AUTO".
- **DEFROST -** Defrost Will Only Be Performed At Outdoor Temperatures Less Than 50ºF. Defrost Will Initiate When Time Selected Has Elapsed And The Coil Temperature Is Less Than 32ºF (+/-2ºF). It Will Terminate At 65ºF, 50ºF, or 45ºF (+/-5ºF), As Needed Based On OAT. At Defrost Termination The Outdoor Fan Will Turn On 15 Seconds Before Switching The Reversing Valve..
- **FIELD INITIATED FORCED DEFROST -** (Shown As Forced Defrost On Board) By Placing A Jumper Across The Forced Defrost Terminals For 5 Seconds, Or Longer, And Then Removing The Jumper The Unit Will Initate A Defrost Cycle Regardless Of Coil Temperature. The Defrost Cycle Will Terminate At 65ºF (+/-5ºF) If Coil Termperature Is Above 32ºF Or Outdoor Ambient Temperature Is Above 50ºF, Defrost Mode Will Terminate After 30 Seconds Of Active Mode.

NOTES:

1. To Be Wired In Accordance With National Electric Code (N.E.C.) And Local Codes.
2. Use Copper Conductors Only. Use Conductors Suitable For At Least 75ºC (167ºF).
3. Two Wire A and B Required For Communication. If Outdoor Unit Improperly Grounded, Connect Indoor Ground To "C" Terminal.
4. If Any Of The Original Wire, As Supplied, Must Be Replaced, Use The Same Or Equivalent Wire.
5. Check All Electrical Connections Inside Control Box For Tightness.
6. Do Not Attempt To Operate Unit Until Service Valves Have Been Opened.
7. **If Communicating, Must Use With Infinity or Evolution User Interface Listed In Pre-sale Literature Only.**
8. For Non-Communicating Thermostats, 24VAC To Be Provided To R Connection.
9. N.E.C. class 2, 24 V circuit, min. 40 VA required, 60 VA on units installed with LLS.

-LEGEND-

———	FACTORY POWER WIRING
– –	FIELD POWER WIRING
———	FACTORY CONTROL WIRING
- - - -	FIELD CONTROL WIRING
○	COMPONENT CONNECTION
—●—	JUNCTION
	FIELD SPLICE
	PLUG CONNECTION
COMM	SYSTEM COMMUNICATION
COMP	COMPRESSOR
EXV	ELECTRONIC EXPANSION VALVE
LD1	HIGH VOLTAGE INDICATOR LED
HPS	HIGH PRESSURE SWITCH
LVCH	LOW VOLTAGE CHOKE HARNESS
MODEL	MODEL PLUG
OAT	OUTDOOR AIR THERMISTOR
OCT	OUTDOOR COIL THERMISTOR
ODT	OUTDOOR DISCHARGE THERMISTOR
OFM	OUTDOOR FAN MOTOR
OST	OUTDOOR SUCTION THERMISTOR
PEV	PRESSURE EQUALIZER VALVE
RVS	REVERSING VALVE SOLENOID
SPT	SUCTION PRESSURE TRANSDUCER
STATUS	SYSTEM FUNCTION LIGHT
SW2	DEFROST TIME SELECT
TB	TERMINAL BLOCK
UTIL	UTILITY CURTAILMENT
24V	24 VOLTS DC

*** MAY BE FACTORY OR FIELD INSTALLED**

339885-101 REV. D

Fig. 1 – 288BNV 208/230-1

©Bryant Heating & Cooling Systems 7310 W. Morris St. Indianapolis, IN 46231
Edition Date: 06/14

Catalog No. WD288B−01

Manufacturer reserves the right to discontinue, or change at any time, specifications or designs without notice and without incurring obligations.

Replaces: New